2013 Revision to the

2012 Edition

Uniform Standard Specifications and Details for Public Works Construction

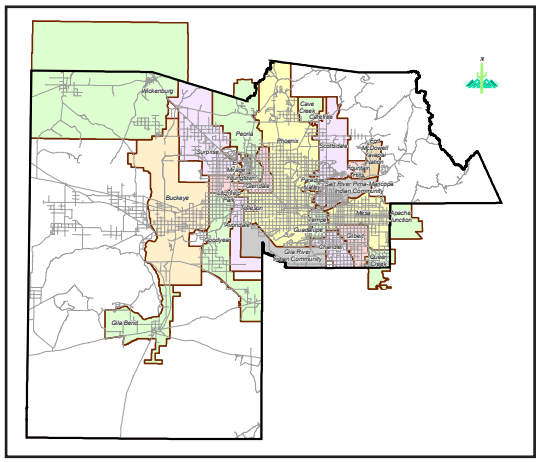

Sponsored and Distributed by the

MARICOPA ASSOCIATION of GOVERNMENTS

January 2013

NEW IN THE 2013 REVISION

Uniform Standard Specifications and Details for Public Works Construction—2013 Revision to the 2012 Edition
The MAG Standard Specifications and Details Committee, with assistance from five specialized working groups, considered 20 cases during the 2012 session. Of these, 17 were approved and included in this revision.

New Specifications:
- None

Specifications rewritten, or with major updates:
- Section 107: Legal Regulations and Reponsibility to Public
- Section 310: Placement and Construction of Aggregate Base
- Section 350: Removal of Existing Improvements
- Section 415: Flexible Metal Guardrail
- Section 701: Aggregate
- Section 702: Base Materials
- Section 710: Asphalt Concrete
- Section 711: Paving Asphalt

Specifications with minor updates:
- Section 108: Commencement, Prosecution and Progress
- Section 317: Asphalt Milling
- Section 321: Placement and Construction of Asphalt Concrete Pavement
- Section 332: Placement and Construction of Asphalt Emulsion Slurry Seal Coat
- Section 505: Concrete Structures
- Section 610: Water Line Construction
- Section 725: Portland Cement Concrete
- Section 728: Controlled Low Strength Materials
- Section 770: Structural and Rivet Steel, Rivets, Bolts, Pins and Anchor Bolts.

Specifications that have been deleted:
- Section 709: Reclaimed Asphalt Pavement
- Section 719: Recycled Asphalt Concrete Hot Mixed

New detail drawings:
- Detail 260: Alley Entrance (With Vertical Curb and Gutter)
- Detail 360-1: Dry Barrel Fire Hydrant Installation
- Detail 360-2: Wet Barrel Fire Hydrant Installation
- Detail 360-3: Fire Hydrant Installation Details

Details that have been updated:
- Detail 160: 6’ Chain Link Fence and Gate (Note correction)
- Detail 201: Asphalt Pavement Edge Details (Added Safety Edge)
- Detail 250-2: Driveway Entrances with Sidewalk Attached to Curb (Modified to have 4’ min. sidewalk width)

NEW IN THE 2012 EDITION

The *Uniform Standard Specifications and Details for Public Works Construction—2012 Edition* was a major revision of the document.

New specficiations:
- Section 337: Crack Sealing

Specifications rewritten, or with major updates:
- Foreword
- Sections 220 and 703: Riprap
- Section 309: Lime Slurry Stabilization
- Section 311: Soil Cement Base Course
- Section 312: Cement Treated Base
- Section 321: Asphalt Concrete Pavement
- Sections 325 and 717: Asphalt Rubber Specifications
- Sections 332 and 715: Slurry Seal Material and Applications
- Sections 334 and 718: Preservative Seal for Asphalt Concrete
- Section 335: Hot Asphalt Rubber Seal (Chip)
- Section 340.2: Detectable Warnings
- Section 520: Steel and Aluminum Handrails
- Section 701: Aggregates
- Section 711: Paving Asphalt
- Section 713: Emulsified Asphalt Materials
- Section 716: Cover Material

Specifications with minor updates:
- Updates to ASTM references
- Updates to brass and bronze water line construction materials to meet federal low lead standards
- Not including formatting issues, over 50 sections have had revisions made for the 2012 Edition. For more information, look for the last revised date in the table of contents, and look for the grey bars in the text indicating where changes were made.

Specifications that have been deleted:
- All Sample Forms and Contracts
- Section 225: Watering (moved into Section 104.1.3)
- Section 313: Bituminous Treated Base Course
- Section 323: Heater Remix Resurfacing
- Section 341: Terrazzo Sidewalks
- Section 501: Driving Piles
- Section 780: Timber Piles
- Section 781: Steel Piles
- Section 782: Concrete Piles
- Section 785: Steel Castings
- Section 786: Bronze Castings

New detail drawings:
- Detail 234: Curb Modification at Detectable Warning
- Detail 423-1: 24” Cast Iron Manhole Frame and Cover
- Detail 423-2: 30” Cast Iron Manhole Frame and Cover
- Detail 424-1: 24” Cast Iron Watertight Manhole Frame and Cover
- Detail 424-2: 30” Cast Iron Watertight Manhole Frame and Cover

Details that have been updated:
- Detail 210: Residential Speed Hump
- Detail 212: Utility Pothole Repair
- Details 235-1 through 4: Curb Ramps (Type A, B, C and D)
- Detail 262: Wing Type Alley Entrance
- Details 421, 422, 501-1 and 501-2 have been updated to change references of “grout” to “mortar.”

Details that have been deleted:
- Detail 190: Rock Correction Procedure
- Details 135-1 thru 135-4: Steel Guard Rails
- Detail 170: Typical Runway or Taxiway Edge Lighting
- Detail 402: Encased Pipe for Canal Crossing
- Details 260 and 261: Alley Entrances

For more information and links to agency supplements please visit: http://www.azmag.gov/Committees/Committee.asp?CMSID=1055

UNIFORM STANDARD SPECIFICATIONS for PUBLIC WORKS CONSTRUCTION

SPONSORED and DISTRIBUTED by the

MARICOPA ASSOCIATION of GOVERNMENTS

2013 Revision to the 2012 Edition

ARIZONA

FOREWORD

Publication of these Uniform Standard Specifications and Details for Public Works Construction fulfills the goal of a group of agencies who joined forces in 1966 to produce such a set of documents. Subsequently, in the interest of promoting county-wide acceptance and use of these standards and details, the Maricopa Association of Governments accepted their sponsorship and the responsibility of keeping them current and viable.

These specifications and details, representing the best professional thinking of representatives of several Public Works Departments, reviewed and refined by members of the construction industry, were written to fulfill the need for uniform rules governing public works construction performed for Maricopa County and the various cities and public agencies within Maricopa County who could not afford to promulgate such standards for themselves. Agencies in other regions or climes that desire to use these specifications may need to make adjustments for local conditions.

A uniform set of specifications and details, updated and embracing the most modern materials and construction techniques will reduce conflicts, provide clarity and lower construction costs for the benefit of the public.

Use of these standards for projects outside of the right-of-way should be reviewed by professional engineers and architects and applied with care to insure relevance to the planned work.

Specifications and details should be incorporated into project plans and specifications after careful review by the design engineer or architect of specific project needs. Not all specifications contained herein will apply to all projects. Prepared plans and specifications should clearly call out only those specific uniform specifications and details required for the project.

Uniform specifications and details are not a substitute for good engineering judgment. Unique conditions will arise that are outside the scope of these standards. When this happens, professional engineers and architects are required to use their judgment to amend these standards to best meet site-specific project needs in accordance with the rules set forth by the State of Arizona and policy statements made by the Arizona State Board of Technical Registration.

The Uniform Standard Specifications and Details for Public Works Construction are revised periodically and reprinted to reflect the changing technology of the construction industry. To this end a Specifications and Details Committee has been established as a permanent organization to continually study and recommend changes to the Specifications and Details. Interested parties may address suggested changes and questions to:

Standard Specifications & Details Committee
c/o Maricopa Association of Governments
302 North First Avenue, Suite 300
Phoenix, Arizona, 85003

Suggestions will be reviewed by the committee and appropriate segments of the construction industry and revisions will be published the first of each year. A copy of this publication is available for review on the internet at the website listed below. Please follow the links to the publications page and look for *Uniform Standard Specifications for Public Works Construction and/or Uniform Standard Details for Public Works Construction*:

www.azmag.gov

In the interest of regional uniformity, it is hoped that all using agencies will adopt these standards with minimal changes. It is recognized that because of charter requirements and for other reasons, some agencies will find it necessary to modify or supplement certain requirements. In the interest of regional uniformity, it is strongly recommended that using agencies bring desired modifications to the MAG Committee for consideration and inclusion into these standards.

TABLE OF CONTENTS

PART 100 - GENERAL CONDITIONS

Section	Last Revised	Title	Page
101	2012	Abbreviations and Definitions	101-1
102	2008	Bidding Requirements and Conditions	102-1
103	1999	Award and Execution of Contract	103-1
104	2012	Scope of Work	104-1
105	2008	Control of Work	105-1
106	1998	Control of Materials	106-1
107	2013	Legal Regulations and Responsibility to Public	107-1
108	2013	Commencement, Prosecution and Progress	108-1
109	2011	Measurements and Payments	109-1
110	2000	Notification of Changed Conditions and Dispute Resolution	110-1

PART 200 - EARTHWORK

Section	Last Revised	Title	Page
201	1999	Clearing and Grubbing	201-1
205	1998	Roadway Excavation	205-1
206	2012	Structure Excavation and Backfill	206-1
210	2009	Borrow Excavation	210-1
211	2012	Fill Construction	211-1
215	1998	Earthwork for Open Channels	215-1
220	2012	Riprap Construction	220-1
230	2010	Dust Palliative Application	230-1

PART 300 - STREETS AND RELATED WORK

Section	Last Revised	Title	Page
301	2012	Subgrade Preparation	301-1
306	2010	Mechanically Stabilized Subgrade- Geogrid Reinforcement	306-1
309	2012	Lime Slurry Stabilization or Modification of Subgrade	309-1
310	2013	Placement and Construction of Aggregate Base Course	310-1
311	2012	Placement and Construction of Cement Treated Subgrade	311-1
312	2012	Cement Treated Base	312-1
315	1998	Bituminous Prime Coat	315-1
317	2013	Asphalt Milling	317-1
320	1999	Road-Mixed Surfacing	320-1
321	2013	Placement and Construction of Asphalt Concrete Pavement	321-1
324	1998	Portland Cement Concrete Street Pavement	324-1
325	2012	Placement and Construction of Asphalt-Rubber Asphalt Concrete	325-1
327	2012	Hot In-Place Recycling	327-1
329	1998	Tack Coat	329-1
330	1998	Asphalt Chip Seal	330-1
331	2009	Microsurfacing Specifications	331-1
332	2013	Placement and Construction of Asphalt Emulsion Slurry Seal Coat	332-1
333	2012	Fog Seal Coats	333-1
334	2012	Preservative Seal for Asphalt Concrete	334-1
335	2012	Placement and Construction of Hot Asphalt-Rubber Seal	335-1
336	2011	Pavement Matching and Surfacing Replacement	336-1
337	2012	Crack Sealing	337-1
340	2012	Concrete Curb, Gutter, Sidewalk, Sidewalk Ramps, Driveway and Alley Entrance	340-1
342	2012	Decorative Pavement Concrete Paving Stone or Brick	342-1
343	1998	Exposed Aggregate Paving	343-1
345	2009	Adjusting Frames, Covers, Valve Boxes and Water Meter Boxes	345-1
350	2013	Removal of Existing Improvements	350-1
355	2011	Utility Potholes-Keyhole Method	355-1
360	1998	Telecommunications Installation	360-1

PART 400 - RIGHT-OF-WAY AND TRAFFIC CONTROL

Section	Last Revised	Title	Page
401	1998	Traffic Control	401-1
405	1998	Monuments	405-1
410	1998	Precast Safety Curbs	410-1
415	2013	Flexible Metal Guardrail	415-1
420	1998	Chain Link Fences	420-1
424	1998	Parkway Grading	424-1
425	1998	Topsoils	425-1
430	1998	Landscaping and Planting	430-1
440	1999	Sprinkler Irrigation System Installation	440-1

PART 500 - STRUCTURES

Section	Last Revised	Title	Page
505	2013	Concrete Structures	505-1
506	2012	Precast Prestressed Concrete Members	506-1
510	1998	Concrete Block Masonry	510-1
511	1998	Brick Masonry	511-1
515	1998	Steel Structures	515-1
520	2012	Steel and Aluminum Handrails	520-1
525	1998	Pneumatically Placed Mortar	525-1
530	2000	Painting	530-1

PART 600 - WATER AND SEWER

Section	Last Revised	Title	Page
601	2012	Trench Excavation, Backfilling and Compaction	601-1
602	1998	Encasement of Water or Sewer Pipe by Jacking or Tunneling Operation	602-1
603	2012	Installation for High Density Polyethylene Pipe	603-1
604	2012	Placement of Controlled Low Strength Material	604-1
605	2012	Subdrainage	605-1
610	2013	Water Line Construction	610-1
611	2011	Disinfecting Water Mains	611-1
615	2007	Sewer Line Construction	615-1
616	2002	Reclaimed Water Line Construction	616-1
618	2011	Storm Drain Construction	618-1
620	2012	Cast-in-place Concrete Pipe	620-1
621	1998	Corrugated Metal Pipe and Arches	621-1
625	2012	Manhole Construction and Drop Sewer Connections	625-1
630	2012	Tapping Sleeves, Valves and Valve Boxes on Water Lines	630-1
631	2012	Water Taps and Meter Service Connections	631-1

PART 700 - MATERIALS

Section	Last Revised	Title	Page
701	2013	Aggregate	701-1
702	2013	Base Materials	702-1
703	2012	Riprap	703-1
705	2012	Portland Cement Treated Base	705-1
708	2011	Asphalt Pavement Core Bonding Materials	708-1
710	2013	Asphalt Concrete	710-1
711	2013	Paving Asphalt	711-1
712	1999	Liquid Asphalt	712-1
713	2012	Emulsified Asphalts Materials	713-1
714	2012	Microsurfacing Materials	714-1
715	2012	Slurry Seal Materials	715-1

Section	Last Revised	Title	Page
716	2012	Cover Material	716-1
717	2012	Asphalt-Rubber Asphalt Concrete	717-1
718	2012	Preservative Seal for Asphalt Concrete	718-1
725	2013	Portland Cement Concrete	725-1
726	1998	Concrete Curing Materials	726-1
727	2008	Steel Reinforcement	727-1
728	2013	Controlled Low Strength Material	728-1
729	1998	Expansion Joint Filler	729-1
735	2008	Reinforced Concrete Pipe	735-1
736	2012	Non-Reinforced Concrete Pipe	736-1
737	1998	Asbestos-Cement Pipe and Fittings for Storm Drain and Sanitary Sewer	737-1
738	2012	High Density Polyethylene Pipe & Fittings for Storm Drain & Sanitary Sewer	738-1
741	2011	Lining for Reinforced Concrete Sanitary Sewer Pipe	741-1
743	1998	Vitrified Clay Pipe	743-1
744	1998	ABS Truss Pipe and Fittings	744-1
745	1998	PVC Sewer Pipe and Fittings	745-1
750	2005	Iron Water Pipe and Fittings	750-1
752	1998	Asbestos-Cement Water Pipe and Fittings	752-1
753	2000	Galvanized Pipe and Fittings	753-1
754	2012	Copper Pipe, Tubing and Fittings	754-1
755	2012	Polyethylene Pipe for Water Distribution	755-1
756	2008	Dry Barrel Fire Hydrants	756-1
757	1998	Sprinkler Irrigation System	757-1
758	2005	Concrete Pressure Pipe - Steel Cylinder Type	758-1
759	2002	Steel Pipe	759-1
760	1998	Coating Corrugated Metal Pipe and Arches	760-1
761	1998	Structural Plate Pipe, Arches, and Pipe Arches	761-1
770	2013	Structural and Rivet Steel, Rivets, Bolts, Pins, and Anchor Bolts	770-1
771	2005	Galvanizing	771-1
772	2012	Chain Link Fence	772-2
775	1999	Brick and Concrete Masonry Units (Blocks)	775-1
776	2012	Masonry Mortar and Grout	776-1
778	1998	Lumber	778-1
779	1998	Wood Preservatives	779-1
787	1999	Gray Iron Castings	787-1
790	1999	Paint	790-1
792	2010	Dust Palliative	792-1
795	1998	Landscape Material	795-1
796	2010	Geosynthetics	796-1
	2013	Index	Index-1

This Page is Reserved for Future Use

PART 100

GENERAL CONDITIONS

Section	Last Revised	Title	Page
101	2012	Abbreviations and Definitions	101-1
102	2008	Bidding Requirements and Conditions	102-1
103	1999	Award and Execution of Contract	103-1
104	2012	Scope of Work	104-1
105	2008	Control of Work	105-1
106	1998	Control of Materials	106-1
107	2013	Legal Regulations and Responsibility to Public	107-1
108	2013	Commencement, Prosecution and Progress	108-1
109	2011	Measurements and Payments	109-1
110	2000	Notification of Changed Conditions and Dispute Resolution	110-1

This Page is Reserved for Future Use

SECTION 107

LEGAL REGULATIONS AND RESPONSIBILITY TO PUBLIC

107.1 COMPLIANCE WITH LAWS:

The Contractor shall keep fully informed of, observe and comply with all Federal and State laws, County and City ordinances, regulations, codes and all orders and decrees of bodies or tribunals having any jurisdiction or authority, which in any way affect the conduct of the work. The Contractor warrants that all items supplied and work performed under the contract have been sold, produced, delivered and furnished in strict compliance with all such laws, ordinances, regulations, codes, orders and decrees to which the items, work and Contractor are subject. Upon request, Contractor shall execute and deliver to the Agency such documents as may be required by the Agency to evidence compliance with such laws, ordinances, regulations, codes, orders and decrees. The Contractor shall protect and indemnify the Contracting Agency and its representatives against any claim or liability arising from or based on the violation of such, whether by the Contractor or the Contractor's employees.

107.2 PERMITS:

Permits, bonding and insurance requirements shall be as required by statutes, codes, ordinances or regulations.

The Public Agency, when acting as the Contracting Agency, may obtain some of the required permits. It is the duty of the Contractor to determine that all necessary permits have been obtained. The Contractor shall, at the Contractor's own expense, obtain all the required permits which have not been furnished. The Contractor shall comply with all permit requirements until the Contract is completed or the permit is closed-out or transferred. The Contractor shall be responsible to close out all permits except those authorized by special provision to be transferred.

In all cases, the Contractor or the person supervising the authorized work shall notify the appropriate permit agency so as to insure proper inspection by the agency concerned.

107.3 PATENTED DEVICES, MATERIALS AND PROCESSES:

If the Contractor employees any design, device, material, or process covered by letters of patent or copyright, he shall provide for such use by suitable legal agreement with the patentee or owner. The Contractor and the surety shall indemnify and save harmless the Contracting Agency, any affected third party or political subdivision from any and all claims for infringement by reason of the use of any such patented design, device, material or process, or any trademark or copyright, and shall indemnify the Contracting Agency for any costs, expenses, and damages which it may be obligated to pay by reason of any infringement, at any time during the prosecution or after the completion of the work.

107.4 ARCHAEOLOGICAL REPORTS:

Attention is directed to Sections 41-844 and 41-846 Arizona Revised Statues. In view of the above, it shall be a provision of every contract that when archaeological features are encountered or unearthed in the excavation of material pits or of the roadway prism, or other excavation, the Contractor shall report promptly to the Director of the Arizona State Museum and the Contracting Agency. The Contractor will be allowed extra time as appropriate in accordance with the provisions of Section 108.

107.5 SAFETY, HEALTH AND SANITATION PROVISIONS:

The Contractor shall provide and maintain in a neat, sanitary condition such accommodations for the use of his employees as may be necessary to comply with the requirements and regulations of the Arizona State Department of Health or as specified by the Maricopa County Health Department, Sanitary Code.

The Contractor shall provide all safeguards, safety devices and protective equipment and take any other needed actions, on his own responsibility or as the Engineer may determine, reasonably necessary to protect the life and the health of employees on the job, the safety of the public and to protect property in connection with the performance of the work covered by the contract.

Precaution shall be exercised by the Contractor at all times for the protection of persons (including employees) and property. The Contractor shall comply with the provisions of all applicable laws, pertaining to such protection including all Federal and State occupational safety and health acts, and standards and regulations promulgated there under.

107.5.1 Asbestos Materials: If asbestos materials are encountered during any building remodeling/demolition work, the Contractor shall comply fully with the Arizona Administrative Code, A.A.C. R18-2-901 and notify the Engineer. An extension of contract time will be granted for any delay resulting from the asbestos material in accordance with Section 108.

107.5.2 Lead-Containing Paint: Paint and similar surface coating materials that contain lead compounds and in which the lead content exceeds 0.06 percent of the total weight of the non-volatile content of the paint or the weight of the dried paint film is declared a banned hazardous product and will not be used (Consumer Product Safety Act Part 1303 dated 9-1-77).

107.6 PUBLIC CONVENIENCE AND SAFETY:

The Contractor shall at all times so conduct his work as to assure the least possible obstruction to traffic and adjacent residents. The safety, convenience, and the protection of persons and property, of the general public and residents along the street, highway, and areas adjacent to the work area shall be provided for by the Contractor.

107.6.1 Contractor's Marshaling Yard: If the Contractor or his subcontractor utilizes property outside the limits of the project in the performance of the contract, the Contractor/subcontractor shall comply with the following:

107.6.1.1 Contractor's Marshaling Yard when the Agency is the Contracting Party:

(A) Prior to occupying the property, the Contractor shall provide written notification as to the number and location of all properties to be used. The notification shall specify in detail how the Contractor proposes to use each property and how he proposes to comply with (B) through (D) below. Also, the Contractor shall provide a statement, signed by the property owner(s), which gives the Contractor permission to use the property.

(B) The property(s) shall be adequately maintained to control dust, mud, trash and other pollutants from leaving the property.

(C) Work on the property(s) shall be scheduled so as to comply with the Agency Noise Ordinance.

(D) Use of the property(s) such as location of stored materials, service of equipment, etc., shall be conducted to minimize impact on adjacent properties.

(E) The Contractor shall leave the property in a condition, as determined by the Engineer, equivalent to that which existed prior to entry. In no case shall any use cause, or allow to remain, any negative impact to adjoining properties or right-of-way unless such impact existed prior to the Contractors' use.

(F) The Contractor shall obtain a written release signed and dated from each property owner after completion of use. Each release shall state that, at the time of signing, the owner accepts the property in its present condition from the Contractor and relieves the Contractor and the Agency from any or all claims for the use or damage to said property. A copy of each release shall be submitted to the Engineer.

(G) This Subsection also applies to all levels of subcontractors who will need to obtain marshaling yards for the project, which will be separate from that of the Contractor. It will be the responsibility of the Contractor to obtain copies of the various documents from the subcontractors, as required above, and provide them to the Engineer.

107.6.1.2 Contractor's Marshaling Yard when the Agency is not the Contracting Party (private development, utility work, subdivision construction, etc): All conditions will apply as in Subsection 107.6.1.1 except that the permit holder will be responsible for obtaining all documents. The permit holder will retain the documents and make them available to the Agency upon request.

107.6.2 The Contractor shall comply with the Agency Code concerning work hours and noise level during construction.

107.7 BARRICADES AND WARNING SIGNS:

The Contractor shall provide, erect, and maintain all necessary barricades, suitable and sufficient lights, danger signals, signs and other traffic control devices, and shall take all necessary precautions for the protection of the work and safety of the public. Roads, partially or fully closed to traffic, shall be protected by effective barricades, and obstructions shall be illuminated during hours of darkness. Suitable warning signs shall be provided to properly control and direct traffic.

The Contractor shall erect warning signs in advance of any place on the project where operations may interfere with the use of the road by traffic, and at all intermediate points where the new work crosses or coincides with an existing road. Such warning signs shall be constructed and erected in accordance with the Traffic Barricade Manual prepared or adopted by the Contacting Agency's Traffic Engineering Department which is hereby made a part of these specifications.

107.8 USE OF EXPLOSIVES:

The use of explosives or blasting agents is controlled by the Uniform Fire Code, which is generally administered by the Fire Department of the Agency. The Contractor shall obtain a special permit from the Agency's Fire Department for the use of explosives. A copy of this permit shall be delivered to the Engineer prior to the use of explosives. If the Agency does not use the Uniform Fire Code or have a department for enforcement of this Code, the Contractor shall use explosives only when authorized in writing by the Engineer. The approval by the Engineer for the use of explosives shall not relieve the Contractor from his responsibilities for proper use and handling of the explosives or for any and all damages resulting from their use.

Explosives shall be transported, stored, handled and used in accordance with the provisions and requirements of all applicable laws, ordinances and regulations. Work shall be done in accordance with recommendations of the AGC Manual of Accident Prevention in Construction, the Institute of Makers of Explosives, and the Occupational Safety and Health Administration Regulations (29 CFR 1926.1(U)). In addition to the applicable regulations, the Contractor shall:

(A) Exercise the utmost care not to endanger life or damage property.

(B) Furnish and erect special signs to warn the public of his blasting operations. They shall be located and maintained so as to be clearly evident to the public during all critical periods of blasting operations.

(C) Notify each public utility company, having structures adjacent to the work, of his intention to use explosives. Such notice shall be given sufficiently in advance to enable the companies to advise the Contractor of any precautions that should be taken to protect their structures from damage.

(D) Make a survey of adjacent properties, before commencing blasting operations, locating on drawings and by photographs all existing cracks and damages to structures. A copy shall be filed with the Engineer, including a report.

(E) Blasting shall be accomplished in such a manner that nearby buildings, structures, railways, highways, etc. will be safe from rocks and other projectiles. Adequate blasting mats or other means of protection shall be employed when blasting in congested area or close proximity to any of the above improvements. Steel mats shall not be allowed within 2,000 feet of power lines.

(F) At the time of firing, the Contractor shall station men along the road at sufficient distance from the blasting operation to flag down any vehicles.

The Contracting Agency reserves the right to order the discontinuance of blasting operations at any time.

107.9 PROTECTION AND RESTORATION OF PROPERTY AND LANDSCAPE:

The Contractor shall be responsible for the preservation of all public and private property and shall protect carefully from disturbance or damage all land monuments and property marks until the Engineer has witnessed or otherwise referenced their location and shall not move them until directed.

The Contractor shall be responsible for all damage or injury to property of any character, during the prosecution of the work, resulting from any act, omission, neglect, or misconduct in his manner or method of executing the work, or at any time due to defective work or materials, and said responsibility will not be released until the project shall have been completed and accepted.

When or where any direct or indirect damage or injury is done to public or private property by or on account of any act, omission, neglect, or misconduct in the execution of the work, or in consequence of the nonexecution thereof by the Contractor, he shall restore, at no cost to the Contracting Agency, such property to a condition similar or equal to that existing before such damage or injury was done, by repairing, rebuilding, or otherwise restoring as may be directed, or he shall make good such

damage or injury in an acceptable manner. Such damage will include but not be limited to landscaped areas. The contractor shall regrade the disturbed area as directed and restore the surface material to match existing in type and quality.

When construction is within temporary construction easements, the Contractor shall restore all disturbed areas to a condition equal to or better than the existing improvements. Such restoration will include but not be limited to asphalt, walkways, fences, lights, sprinklers, landscaping, etc. In the case of landscaping, the Contractor may remove and store sod and plant material. If, in the determination of the Engineer, the sod and/or plant material did not survive the transplanting in good condition, the Contractor shall replace the sod and/or plant material to match in type and quality. Also, the Contractor may salvage any sprinkler system materials, lighting materials, etc. In the event that it is not feasible to reinstall the salvaged material, new material shall be installed.

The Contractor shall not dump spoil or waste material on private property without first obtaining from the owner written permission for such dumping. All such dumping shall be in strict conformance with the Grading and Drainage Ordinance of the Contracting Agency.

Access to private property shall be maintained to keep inconvenience to the property owner to a minimum. Prior to any construction in front of driveways the Contractor shall notify the property owner 24 hours in advance. Inconvenience caused by construction across driveways and sidewalks shall be kept to a minimum by restoring the serviceability as soon as possible. If it is necessary to leave open excavation for a long period of time, the Contractor shall provide structurally adequate steel plates to bridge the excavation.

107.10 CONTRACTOR'S RESPONSIBILITY FOR WORK:

The Contractor shall properly guard, protect, and take every precaution necessary against injury or damage to all finished or partially finished work, by the action of the elements or from any other cause until the entire project is completed and accepted by the Engineer. The Contractor shall rebuild, repair, restore, and make good all injuries or damages to any portion of the work before final acceptance at no cost to the Contracting Agency. Partial payment for completed portions of the work shall not release the Contractor from such responsibility.

In case of suspension of the work for any cause whatever, the Contractor shall be responsible for the project and shall take such precautions as may be necessary to prevent damage to the project and shall erect any necessary temporary structures, signs, or other facilities at no cost to the Contracting Agency.

107.11 CONTRACTOR'S RESPONSIBILITY FOR UTILITY PROPERTY AND SERVICES:

At points where the Contractor's operations are adjacent to properties of utility firms or other property, damage to which might result in considerable expense, loss, or inconvenience, work shall not commence until all arrangements necessary for the protection thereof have been made.

The Contractor shall cooperate with the owners of any underground or overhead utilities in their removal and rearrangement operations in order that these operations may progress in a reasonable manner, that duplication of work may be reduced to a minimum, and that services rendered by those parties will not be unnecessarily interrupted.

If any utility service is interrupted as a result of accidental breakage, the Contractor shall promptly notify the proper authority and shall cooperate with the said authority in the restoration of service. No work shall be undertaken around fire hydrants until provisions for continued service have been approved by the local fire authority.

The Contractor shall expose all underground utilities and structures which might interfere with the construction of the project, in order to permit survey location prior to construction.

The Contractor shall assume full responsibility for damages to any underground facility/utility as a result of failing to obtain information as to its location, failing to excavate in a careful, prudent manner or failing to take measures for protection of the facilities/utilities. The Contractor is liable to the owner of the underground facility/utility for the total cost of the repair.

107.12 FURNISHING RIGHT-OF-WAY:

The Contracting Agency will provide right-of-way and easements for all work in advance of construction. Any exceptions will be indicated in the special provisions.

107.13 PERSONAL LIABILITY OF PUBLIC OFFICIALS:

In carrying out any provisions of these specifications, or in exercising any power or authority granted to them by or within the scope of the contact, there shall be no liability upon the Contracting Agency, Engineer, or their authorized representatives, either personally or as officials of the Contracting Agency, it being understood that in all such matters they act solely as agents and representatives of the Contracting Agency.

107.14 NO WAIVER OF LEGAL RIGHTS:

Upon completion of the work, the Contacting Agency will expeditiously make final inspection and notify the Contractor of acceptance. Such final acceptance, however, shall not preclude or stop the Contracting Agency from correcting any measurement, estimate, or certificate made before or after completion of the work, nor shall the Contracting Agency be precluded or stopped from recovering from the Contractor or his surety, or both, such overpayment as it may sustain, or by failure on the part of the Contractor to fulfill his obligations under the contract. A waiver on the part of the Contracting Agency of any breach of any part of the contract shall not be held to be a waiver of any other or subsequent breach.

The Contractor, without prejudice to the terms of the contract and in addition to any specific remedy provided the Contracting Agency in the contract documents, shall be liable to the Contracting Agency for latent defects, fraud or such gross mistakes as may amount to fraud, or as regards the Contracting Agency's rights under any warranty or guaranty or remedy required by law.

- End of Section -

This Page is Reserved for Future Use

All equipment which is proposed to be used on the work shall be of sufficient size and in such mechanical condition as to meet requirements of the work and to produce a satisfactory quality of work. Equipment used on any portion of the project shall be such that it will not damage property adjacent to the work area.

When the methods and equipment to be used by the Contractor in accomplishing the construction are not prescribed, the Contractor is free to use any methods or equipment that he demonstrates to the satisfaction of the Engineer will accomplish the work in conformity with the requirements of the specifications.

When the specifications state the construction shall be performed by the use of certain methods and equipment, such methods and equipment shall be used unless others are authorized by the Engineer. If the Contractor desires to use a method or type of equipment other than those specified, he may request authority from the Engineer to do so. The request shall be in writing and shall include a full description of the methods and equipment proposed to be used and an explanation of the reasons for desiring to make the change. If approval is given, it will be on the condition that the Contractor will be fully responsible for producing construction work in conformity with the specifications. If, after trial use of the substituted methods or equipment, the Engineer determines that the work produced does not meet the specifications, the Contractor shall discontinue the use of the substitute method or equipment and shall complete the remaining construction with the specified methods and equipment. The Contractor shall remove the deficient work and replace it with work of specified quality, or take such other corrective action as the Engineer may direct. No change will be made in basis of payment for the construction items involved nor in contract time as result of authorizing a change in methods or equipment under these provisions.

108.7 DETERMINATION AND EXTENSION OF CONTRACT TIME:

The number of calendar days allowed for the completion of the work included in the contract will be as stated in the proposal and will be known as the contract time.

When the contract time is on a calendar day basis it shall consist of the number of calendar days specified, including all weekends and legal holidays. All calendar days elapsing between the effective dates of any written notice from the Engineer to suspend work and to resume work following suspensions, not the fault of the Contractor, shall be excluded.

When the contract completion time is a fixed calendar date it shall be the date on which all work on the project shall be completed and meet final inspection.

If the Contractor finds it impossible for reasons beyond his control to complete the work within contract time as specified or as extended, he shall immediately submit a written request to the Engineer for an extension of time setting forth therein the reasons which he believes will justify the granting of his request. The Contractor's plea that insufficient time was specified is not a valid reason for extension of time. If the Engineer* finds that the work was delayed because of conditions beyond the control and through no fault of the Contractor, he may extend the time for completion in such amount as the conditions justify. The extended time for completion shall then be in full force and effect the same as though it were the original time for completion.

108.8 GUARANTEE AND WARRANTY PROVISIONS:

The Contractor shall guarantee the work against defective workmanship or materials for a period of one year from the date of its final acceptance under the contract, ordinary wear and tear and unusual abuse or neglect excepted.

Any omission on the part of the Engineer to condemn defective work or materials at the time of construction shall not be deemed an acceptance, and the Contractor will be required to correct defective work or materials at any time before final acceptance and within one year thereafter.

*For Improvement District Project: The words “Superintendent of Streets” will be substituted for the word “Engineer.” Any extension of contract time will be determined by the Superintendent of Streets with the consent of the governing body

Should any defects develop within one year from the date of final acceptance due to faults in workmanship or materials the Contractor shall, within 14 calendar days of receipt of written notice from the Contracting Agency begin making the necessary repairs to the satisfaction of the Engineer. Such work shall include the repair or replacement of other work or materials damaged or affected by making the above repairs or corrective work, all at no additional cost to the Contracting Agency.

If defects develop which are determined by the Engineer to be an emergency, the Engineer shall notify the Contractor, via the most expeditious means, regarding the nature and condition of the defects. In turn, the Contractor shall immediately dispatch necessary forces to correct the defect or the emergency condition. If the Contractor, in his initial action, resolves the emergency condition but not the defect, a letter as discussed above will follow and normal procedures for corrections will be employed. If immediate or appropriate action, satisfactory to the Engineer, is not taken by the Contractor, or if the Contractor cannot be contacted, the Engineer will deploy necessary forces to correct and/or secure the deficiency. Costs of the Engineer's action shall be paid by the Contractor and/or his bonding agency. Should it later be determined that the defects requiring such emergency action are not the responsibility of the Contractor, the Contractor will be paid for all costs incurred as a result of these demands in accordance with Subsection 109.5. Such action by the Engineer will not relieve the Contractor of the guarantees required by this Section or elsewhere in the Contract Documents.

In case of work, materials, or equipment for which written warranties are required by the special provisions, the Contractor shall provide or secure from the appropriate Subcontractor or supplier such warranties addressed to and in favor of the Contracting Agency and deliver same to the Engineer prior to final acceptance of the work. Delivery of such warranties shall not relieve the Contractor from any obligation assumed under any other provisions of the contract.

The warranties and guarantees provided in this subsection of the contract documents shall be in addition to and not in limitation of any other warranties, guarantees or remedies required by law.

108.9 FAILURE TO COMPLETE ON TIME:

For each and every calendar day that work shall remain incompleted after the time specified for the completion of the work in the proposal, or as adjusted by the Engineer, the sum per calendar day shown in Table 108-1, unless otherwise specified in the proposal form, may be deducted from monies due to or to become due to the Contractor, not as a forfeit or penalty but as liquidated damages. This sum is fixed and agreed upon between the parties because the actual loss to the Contracting Agency and to the public caused by delay in completion will be impractical and extremely difficult to ascertain and determine.

Permitting the Contractor to continue and finish the work or any part of it after the time fixed for its completion, or after the date to which the time fixed for its completion may have been extended, will in no way operate as a waiver on the part of the Contracting Agency of any of its rights under the contract.

TABLE 108-1		
LIQUIDATED DAMAGES		
Original Contract Amount		**Daily Charges**
From More Than	To and Including	Calendar Day or Fixed Date
$ 0	$ 25,000	$ 210
25,000	50,000	250
50,000	100,000	280
100,000	500,000	430
500,000	1,000,000	570
1,000,000	2,000,000	710
2,000,000	5,000,000	1,070
5,000,000	10,000,000	1,420
10,000,000	—	1,780

*For Improvement District Project: The words “Superintendent of Streets” will be substituted for the word “Engineer.” Any extension of contract time will be determined by the Superintendent of Streets with the consent of the governing body

PART 300

STREETS AND RELATED WORK

Section	Last Revised	Title	Page
301	2012	Subgrade Preparation	301-1
306	2010	Mechanically Stabilized Subgrade-Geogrid Reinforcement	306-1
309	2012	Lime Slurry Stabilization or Modification of Subgrade	309-1
310	2013	Placement and Construction of Aggregate Base Course	310-1
311	2012	Soil Cement Base Course	311-1
312	2012	Cement Treated Base	312-1
315	1998	Bituminous Prime Coat	315-1
317	2013	Asphalt Milling	317-1
320	1999	Road-mixed Surfacing	320-1
321	2013	Placement and Construction of Asphalt Concrete Pavement	321-1
324	1998	Portland Cement Concrete Street Pavement	324-1
325	2012	Placement and Construction of Asphalt-Rubber Asphalt Concrete	325-1
327	2012	Hot In-Place Recycling	327-1
329	1998	Tack Coat	329-1
330	1998	Asphalt Chip Seal	330-1
331	2009	Microsurfacing Specifications	331-1
332	2013	Placement and Construction of Asphalt Emulsion Slurry Seal Coat	332-1
333	2012	Fog Seal Coats	333-1
334	2012	Preservative Seal for Asphalt Concrete	334-1
335	2012	Placement and Construction of Hot Asphalt-Rubber Seal	335-1
336	2011	Pavement Matching and Surfacing Replacement	336-1
337	2012	Crack Sealing	337-1
340	2012	Concrete Curb, Gutter, Sidewalk, Sidewalk Ramps, Driveway and Alley Entrance	340-1
342	2006	Decorative Pavement Concrete Paving Stone or Brick	342-1
343	1998	Exposed Aggregate Paving	343-1
345	2009	Adjusting Frames, Covers, Valve Boxes and Water Meter Boxes	345-1
350	2013	Removal of Existing Improvements	350-1
355	2011	Utility Potholes-Keyhole Method	355-1
360	1998	Telecommunications Installation	360-1

This Page Reserved for Future Use

SECTION 310

PLACEMENT AND CONSTRUCTION OF AGGREGATE BASE COURSE

310.1 DESCRIPTION:

Aggregate base course shall comply with Section 702 unless the use of a different type of material is specifically authorized in the special provisions.

310.2 PLACEMENT AND CONSTRUCTION:

The compacted lift thickness shall not exceed 6 inches, unless approved by the Engineer. Based on the type of material, type of equipment and compaction methods used, the Contractor may propose a greater lift thickness to the Engineer for approval.

After distributing, the aggregate base course material shall first be uniformly watered and then graded to a uniform layer that will net, after compacting, the required thickness. The grading operation shall be continued to such extent as may be necessary to minimize segregation. The quantity of water applied shall be that amount which will assure proper compaction resulting in the density required by Section 310.3.

After placement, the aggregate base course surface shall be true, even and uniform conforming to the grade and cross-section specified. In no case shall the aggregate base course vary by more than ½ inch above or below required grade.

310.3 COMPACTION

The contractor is responsible for providing appropriate equipment and techniques to achieve the compaction results required by this specification. The aggregate base course shall be compacted in lift thicknesses as allowed by Section 310.2.

The laboratory maximum dry density and optimum moisture content for the aggregate base course material shall be determined in accordance with AASHTO T-99. (Note: when testing base materials – use method “C” or “D” as required based upon the gradation of the material.) Field ‘one-point’ maximum dry density and optimum moisture procedures shall only be allowed upon approval of the Engineer.

The in-place density shall be determined in the field by nuclear density testing in accordance with AASHTO T-310 or sand cone density testing in accordance with AASHTO T-191. In the event nuclear density testing is selected, and density results are in question, a sand cone correlation will be performed by the accepting agency at the contractor’s request, not to exceed one sand cone for each ten nuclear density tests.

A rock correction, to compensate for rock content larger than the #4 or ¾ inch sieves (as required by the laboratory maximum dry density and optimum moisture procedure selected), shall be performed in accordance with AASHTO T-224. Care should be taken to account for the specific gravity of the oversize particles particularly if recycled materials are utilized for aggregate base course. The specific gravity shall be determined in accordance with AASHTO T-85, as applicable.

For roadway construction, a minimum of one field density test shall be performed per lift per 660 feet per lane. For other aggregate base course applications, a minimum of one field density test shall be performed for each 800 square yards.

Unless otherwise noted in the project plans or project specifications, the moisture content of the aggregate base course at the time of compaction shall be the optimum moisture content +/- 3%.

The following percent compaction is required:

(A) Below asphalt concrete pavement	100%
(B) Below Portland cement concrete pavement, driveways, curb & gutter, sidewalks, and roadway shoulders	95%
(C) All other areas not subject to vehicular traffic	85%

Revised 2013

Areas which fail initial testing for density and/or moisture content shall be reworked until passing tests for density and/or moisture content are achieved. Lower moisture content percentages at the time of field density testing may be allowed if significant time has passed since the time of compaction and the required density has been achieved.

310.4 THICKNESS AND/OR PLASTICITY INDEX DEFICIENCY:

When in the opinion of the Engineer there is reason to believe that a deficiency in thickness, or an excess of plasticity exists, measurements or samples will be taken in the same pattern as that defined in Section 321. If the base has been covered or it is otherwise impractical to correct the deficiency, the corrective measures in Table 310-1 shall be taken by the Contractor at no additional cost to the Contracting Agency.

TABLE 310-1

THICKNESS AND PLASTICITY DEFICIENCY

Type	Deficiency	Corrective Measure
I	Less than 1/2 inch of the required thickness	No corrective measure required.
II	1/2 inch or more but less than 1inch of the required thickness	(1) The contractor may choose to add additional material and rework the grade to meet the specification requirements. (2) The contractor may choose to increase the thickness of asphalt concrete by the amount of the aggregate base course thickness deficiency at no additional cost to the Owner. Required grade shall be met.
III	Thickness deficiency by greater than 1 inch	(1) The contractor will remove the aggregate base course and regrade the subgrade to allow the required aggregate base course layer thickness to be constructed. (2) If grades allow, the contractor may propose that the thickness of asphalt concrete be increased by the amount of the aggregate base course deficiency at no additional cost to the Owner.
IV	A plasticity index of 6 to 7 inclusive or gradation deficiency	(1) An Engineering Analysis (EA) that includes R-value testing may be prepared by the contractor to evaluate the expected performance of the aggregate base course layer. The EA may provide mitigation options for the Engineer to consider. If the Engineer accepts the plasticity index as a result of the EA, the material will be accepted at full payment. If the Engineer rejects the EA, the contractor will perform either option 2 or 3 below. (2) The contractor may choose to reprocess or treat the existing material to bring it within specification limits or remove deficient material from affected area and replace with material complying with the specifications. (3) If grades allow, the contractor may increase the thickness of asphalt concrete by ½-inch at no additional cost to the Owner.
V	A plasticity index of over 7	(1) The contractor may choose to reprocess or treat the existing material to bring it within specification limits or remove deficient material from affected area and replace with material complying with the specifications.

310.4 PAYMENT:

Payment for aggregate base course will be made on the basis of the contract unit price per ton unless an alternate basis of payment is provided in the proposal.

- End of Section -

SECTION 311

PLACEMENT AND CONSTRUCTON OF CEMENT TREATED SUBGRADE

311.1 DESCRIPTION:

This item shall consist of a cement treated subgrade composed of a mixture of local soil, Portland cement, and water compacted at optimum moisture content.

311.2 MATERIALS:

Portland cement and water shall comply with Sections 725. The soil for the mixture shall consist of the material in the area to be paved. The material shall not contain more than 5 percent gravel or stone retained on a 3 inches sieve. It shall be demonstrated by laboratory tests that the plasticity and strength characteristics as defined in Section 311.4.5 of the soil will be adequately modified by the specified cement content.

311.3 EQUIPMENT:

An ample number of machines, combination of machines and equipment shall be provided and used to produce the complete soil cement treated layer meeting the requirements for soil pulverization, cement distribution, water application, incorporation of materials, compaction, finishing, and for application of the curing material as provided in these specifications.

Mixing shall be accomplished by means of multiple-pass soil-cement mixer, single-pass soil-cement mixer or central plant mixer.

Water may be applied through the mixer or with the water trucks equipped with pressure sprays. Water trucks providing fine fog-type sprays shall be furnished for finishing and curing. Properly adjusted garden type nozzles on a pressure bar may be used to produce fog spray if approved by the Engineer.

Cement spreader shall be a specially constructed device to distribute bulk cement at the specified rate. The spreader shall have the ability to maintain a consistent spread rate over variable travel speeds.

311.4 CONSTRUCTION METHODS:

Prior to construction, the contractor shall remove all deleterious material, organic material, and particles retained on the 3 inch sieve from the area to be treated. The soil shall be brought to a compacted condition, true to line and grade as directed by the Engineer or as shown on the plans. The compacted soil and surface shall be approved by the Engineer prior to proceeding with mixing.

The material shall be scarified, pulverized, mixed with water and cement, compacted, finished and cured in lengths permitting the full roadway width to be complete in not more than 4 hours from the time that cement is exposed to water. Such lengths will generally be not less than 600 feet or the length of one City block and preferably more. Where a gutter section exists the material shall be pulled back from the gutter face for the full depth of the course before processing.

311.4.1 Pulverizing: Prior to application of cement, soil to be processed shall be scarified to depth of base. The material shall be damp at time of scarifying to reduce the dust generation and to aid in pulverization. Soil shall be pulverized until not less than 80 percent, exclusive of gravel or stone, will pass a No. 4 sieve.

311.4.2 Application of Cement: The quantity of cement shall be by weight as a percentage of the dry weight of the soil as determined by the laboratory and/or as directed by the Engineer and shall be applied uniformly on the soil in a manner satisfactory to the Engineer. The allowable deviation in uniformity shall not exceed 10 percent. The entire operation of spreading and mixing shall be conducted in such a manner as will result in a uniform soil cement and water mixture for the full design width and depth.

The percentage of moisture in the soil, at the time of cement application, shall not exceed the quantity that will permit a uniform and intimate mixture of the soil and cement during mixing operations, and it shall not exceed the specified optimum moisture content for the soil cement mixture.

SECTION 317

ASPHALT MILLING

317.1 DESCRIPTION:

The work under this section shall consist of milling existing asphalt concrete pavement where shown on the Plans or requested by the Engineer.

317.2 CONSTRUCTION REQUIREMENTS

Contractor is responsible for locating all milling hazards on and below the surface within the areas to be milled including areas requiring special milling. Special milling is not a separate pay item and shall be paid for as Asphalt Milling.

The milling cut depth shall be the depth indicated on the Plans plus or minus 1/8 inch. The milling machine shall have electronic grade controls. Contractor shall remove the milled material and sweep the roadway clean with a power pick-up broom to the satisfaction of the Engineer.

Asphalt pavement adjacent to manholes, valve boxes, small radius curbs and other fixed objects that produce confined area shall be removed with milling equipment specifically designed to operate in constricted areas. The equipment shall be capable of removing asphalt concrete of the specified thickness without damage to, or displacement of, the adjacent object(s).

The Contractor shall be responsible for continually checking the milling operation to determine that the proper depth of milling has been achieved, that the proper profile and cross slope are achieved, and that the surface texture is (a) free from longitudinal ridges, and (b) has a uniform pattern.

The Contractor shall immediately notify the Engineer when:

- The existing pavement thickness is found to be less than anticipated and breaking of the underlying material occurs.
- Delamination of underlying material occurs.

The work shall result in a clean milled surface to the specified depth for the area indicated by the construction documents including the areas immediately around and next to any individual hazard within the area to be milled. The edge of milled area shall form a straight clean cut line.

For milled surfaces on major streets (arterial and collector streets) that will be subject to traffic prior to overlay, a tack coat per Section 329 may, when authorized by the Engineer, be applied to the milled surface as a dust control measure. The tack coat shall be applied after sweeping and prior to allowing traffic on the milled surface. The tack coat application rate shall be half of the prescribed tack rate or contract amount or an alternate rate as prescribed by the Engineer. The Contractor shall be responsible for clean-up of any tack coat tracking that occurs.

317.3 MEASUREMENT AND PAYMENT:

Measurement for Asphalt Milling will be by the square yard and shall only include area milled to the required depth and cross-section.

Payment for Asphalt Milling at the contract unit price shall be full compensation for the work, complete-in-place, including all asphalt milling, milling around structures, removal and disposal of milled materials, and sweeping.

Engineer approved tack coat applied for dust control will be paid at the contract rate for tack coat. No additional payment for the application of dust control tack coat shall be made.

- End of Section -

SECTION 320

ROAD-MIXED SURFACING

320.1 DESCRIPTION:

Road-mixed surfacing shall consist of a mixture of mineral aggregate and bituminous binder mixed on the roadbed or other area, spread and compacted on a prepared subgrade or base course in conformity with the lines, grades, and dimensions shown on the plans or typical cross-section, or as specified in the special provisions.

320.2 MATERIALS:

Materials shall conform to the requirements of Sections 710 and 712 for the type and grade specified on the special provisions.

320.3 PRIME COAT:

When a prime coat is required, it shall be applied as specified in Section 315.

320.4 SPREADING AGGREGATE:

The mineral aggregate shall be deposited in a windrow along one side of the roadbed by means of approved spreader box equipped with a readily adjustable strike off device or other suitable equipment. The maximum lift for blade mixing and laying shall not exceed 1 cubic yard per running foot. If the mineral aggregate is delivered to the roadbed in separate sizes, each size of aggregate shall be spread in a windrow of the required quantity for that size of material, after which the windrows of various sizes shall be blended into one windrow alongside of the roadbed.

The aggregate shall be so spread that the windrows will be uniform and equal in size and will contain the proper quantity of material to provide surfacing of the required width and thickness. Care shall be exercised to prevent the aggregate from becoming mixed with earth or shoulder material. Preparatory to applying the liquid asphalt, a portion of the material from the windrow shall be spread uniformly over one-half the width of the roadbed.

Unless permitted by the Engineer, no more aggregate shall be spread on any one day than can be mixed with liquid asphalt within 72 hours. If traffic conditions require, the Engineer may require spread or flattened windrows.

320.5 APPLICATION OF LIQUID ASPHALT:

The temperature of the liquid asphalt, when applied, shall be in accordance with Section 712, and 16 to 22 gallons shall be applied for each cubic yard of road-mix material, in not less than 2 approximately equal applications.

Unless otherwise approved by the Engineer, no liquid asphalt shall be spread when weather conditions are unsuitable, or when the moisture content of the mineral aggregate exceeds 3 percent by weight of the dry aggregate. When the aggregate is unusually porous, the permissible moisture content may be increased and liquid asphalt spread at the discretion of the Engineer, when laboratory tests indicate that such increased moisture content will not produce an unstable mixture.

Liquid asphalt shall be prevented from spraying upon adjacent pavements, structure, guard rails, guide posts, culvert markers, trees and shrubbery, adjacent property and improvements, and other highway improvements or facilities not specifically mentioned herein, or that portion of the traveled way being used by traffic.

320.6 MIXING:

Immediately following each successive application of liquid asphalt, the surfacing material shall be thoroughly mixed by means of a blade. After the final application, the material shall be bladed into a windrow and the windrow bladed back and forth between the center and the edge of the area to be surfaced with a heavy blade grader having a wheel base not less than 16 feet long, until a satisfactory mixture of uniform appearance is obtained.

Should the mixture show an excess or deficiency of liquid asphalt, or uneven distribution thereof, prior to spreading and compacting, the condition shall be corrected by adding mineral aggregate or liquid asphalt, as the need may be, and remixing the material to produce a satisfactory mixture. If necessary, all compressed masses of material shall be broken up.

Except when they have been preheated and remixed, pavement surfaces shall be prepared as follows:

(a) Before placing asphalt concrete overlay, severely raveled areas or cracked areas that are depressed more than 3/4-inch from the adjoining pavement shall be cut out and patched at least 48 hours prior to the resurfacing operation. Over-asphalted areas or rough high spots shall be either milled or cut out and patched. Large shrinkage cracks shall be filled with asphalt sealing compound acceptable to the Engineer. The entire surface shall be cleaned with a power broom. Raveled areas that do not require removing shall be cleaned by hand brooming. The above are incidental, and the cost thereof shall be included in the bid items.

(b) Before placing asphalt concrete overlay, milling shall be done as shown on the plans or specified in the special provisions and shall be in accordance with Section 317.

(c) After surfaces have been prepared to the satisfaction of the Engineer, they shall receive a tack coat per Section 321.4. Traffic will not be permitted to travel over surfaces which have received a tack coat. When the overlay is to extend onto the concrete gutter, the gutter shall be thoroughly cleaned of loose dust and cement particles and shall be tack coated.

Asphalt concrete overlay shall be placed as specified in Section 321.8.1 and compacted as specified in Section 321.8.4. The surface smoothness shall meet the tolerances specified in Section 321.8.5.

Manholes shall be built up and the frames set flush with the finished surface of the new paving, and tops of valve boxes, clean-outs and other existing structures shall be adjusted to finish grade. In the event the base course and original paving have been removed or disturbed in order to build up the manhole, they shall be replaced with approved materials which shall be thoroughly compacted. The asphalt concrete around the manhole frame shall be completed and made flush with the adjacent overlay.

321.8.7 Pavement Fabric Interlayer: Pavement fabric interlayer shall be used only when specified on the plans or in the specifications.

Pavement fabric interlayer shall be in accordance with Table 796-1 and be the class designated on the plans or in the specifications.

Asphalt binder coat used to bond the fabric to the pavement shall be paving asphalt PG 70-10 asphalt cement conforming to the requirements of Section 711. The application and distributing equipment for the asphalt binder shall conform to the requirements of Section 330. The asphalt binder coat shall be uniformly spray applied to the prepared pavement surface at the rate of 0.20 gallons per square yard for Class B fabric or at the rate of 0.25 gallons per square yard for Class A fabric. Some underlying surfaces may require a higher or lower application rate. A test strip may be necessary to determine the proper application rate. The width of liquid asphalt cement application shall be the fabric width, plus six inches.

Neither the asphalt binder coat or fabric interlayer shall be placed when weather conditions, in the opinion of the Engineer, are not suitable. The asphalt binder and fabric interlayer shall only be placed when the pavement is dry, the ambient air temperature is 50 degrees F and rising, and pavement temperature is 40 degrees F and rising.

Equipment for placing the fabric shall be mechanized and capable of handling full rolls of fabric. The equipment shall be able to lay the fabric smoothly to maximize pavement contact and remove air bubbles. Stiff bristle brooms shall be used to smooth the fabric. The equipment used to place the fabric shall be in good working order and is subject to approval by the Engineer.

Pavement fabric interlayer shall not be placed if the in-place binder is hotter than 325 degrees F or has cooled to 180 degrees F or below (as determined by non-contact thermometer).

Pavement fabric interlayer shall be placed onto the asphaltic binder with the heat bonded side up with a minimum amount of wrinkling or folding. Remaining wrinkles or folds 1-inch and larger shall be removed or slit and shingle-lapped in the direction of paving. Burning or torching of wrinkles is not allowed. Fabric shall overlap three to six inches to insure full closure of the joint. Transverse joints shall be shingle-lapped in the direction of paving to prevent edge pickup by the paver. A second application of hand-placed asphalt binder may be required at laps and repairs as determined by the Engineer to ensure proper binding of the narrow double fabric layer.

All areas where fabric has been placed shall be paved with asphaltic concrete during the same workshift. Placement of the asphaltic concrete shall closely follow fabric lay down. The temperature of the asphaltic concrete immediately behind the laydown machine shall not exceed 325 degrees F. In the event that the asphalt binder coat bleeds through the fabric causing construction problems before the overlay is placed, the affected areas shall be sanded with a sand blotter in compliance with Section 333. Excess sand shall be removed before beginning the paving operation. In the event of rainfall prior to the placement of the asphaltic concrete, the fabric shall be allowed to dry before the asphalt concrete is placed.

Turning of the paving machine or of other vehicles on the fabric shall be gradual and kept to a minimum to avoid damage to the fabric. Should equipment tires stick to the fabric during pavement operations, small quantities of paving asphalt concrete shall be broadcast on the fabric to prevent pick-up. Decrease of binder rate in order to minimize pick-up on tires is not allowed.

321.8.8 Thickened Edge: Prior to commencing paving operations that require construction of a thickened edge, the Contractor shall submit for the Engineer's approval construction procedures to be used for placement and compaction of the thickened edge.

When the depth of the thickened edge extends two inches or more below the bottom of the asphalt pavement base course, the portion below the base course shall be placed and compacted as a separate construction operation. Construction of the base course may immediately follow compaction of the lower portion of the thickened edge.

When the depth of the thickened edge extends less than two inches below the bottom of the asphalt pavement base course, the portion below the base course may be placed and compacted with the base course in a single operation.

321.8.9 Safety Edge: The finished safety edge slope shall be planar forming a 30° ± 5° angle with the adjacent roadway surface and extend a minimum of five inches (5") below the roadway pavement's finished surface.

The safety edge shall be constructed with the top or final paving lift of a new pavement or overlay using a device that is mounted to or is a part of the screed portion of the laydown machine. The safety edge device shall be capable of constraining the asphalt concrete material to increase density of the extruded profile by reducing the volume. A conventional single strike-off plate is not acceptable. Compaction obtained from the extruded safety edge shall be acceptable when the extruded shape conforms to the specified shape.

During laydown operations if the extruded safety edge does not conform to the specified shape, the Contractor shall take immediate actions to correct the deficiency and to repair all non-compliant sections of safety edge. The Contractor shall stop paving operations until corrections to the laydown operation have been made and resumption of paving is approved by the Engineer or his designated representative.

321.9 QUALITY CONTROL:

It is the contractor's responsibility to perform Quality Control monitoring and/or testing during asphalt concrete production to achieve the required compaction and to perform Quality Control monitoring and/or testing during asphalt concrete production to achieve the required mix properties. The Engineer may obtain samples of any portion of any material at any point of the operations for his own use. Also, the Engineer may order the use of any drying, proportioning and mixing equipment or the handling of any material discontinued which, in his/her opinion, fails to produce a satisfactory mixture.

The asphalt concrete produced shall conform to the requirements of the production tolerances established in section 321.10. When the asphalt concrete does not conform to the production tolerances, it shall be reported to the Engineer, and corrective quality control measures shall be implemented, or production shall cease immediately at no additional cost to the contracting Agency or Engineer.

321.10 ACCEPTANCE:

321.10.1 Acceptance Criteria: Unless otherwise specified, asphalt concrete will be divided into lots for the purpose of acceptance. A lot shall be considered to be one day's production. When the quantity of asphalt concrete placed in a day exceeds 500 tons but is less than 2000 tons, the lot shall be divided into 500 ton sublots or fraction thereof. Where the quantity of asphalt concrete placed in a day exceeds 2000 tons, the day's production will be divided into four (4) approximately equal sublots. A minimum of one sample will be obtained from each lot. Tests used to determine acceptance will be performed by the Engineer or a laboratory employed by the Engineer. In either case the laboratory shall be accredited by the AASHTO Accreditation Program (AAP), for the tests being performed. The acceptance laboratory will take representative samples of the asphalt

concrete from each sublot to allow for gradation, binder content, air voids, pavement thickness and compaction of base and surface course. Each sublot will be accepted based upon the test data from the sample(s) from that sublot. All acceptance samples shall be taken using random locations or times designated by the Engineer in accordance with ASTM D3665.

321.10.2 Gradation, Binder Content and Air Voids: The acceptance laboratory will take a sample of the asphalt concrete in accordance with the requirements of Section 2 or 4 of Arizona Test Methods 104 or AASHTO T-168 from each sublot. The minimum weight of the sample shall be 45 pounds. Asphalt binder content and gradation shall be determined in accordance with AASHTO T-308 using the ignition furnace for each sublot. The acceptance laboratory is responsible for obtaining the necessary materials and performing an ignition furnace calibration as outlined in AASHTO T-308 for each asphalt concrete mixture utilized on the project. The correction factor used for each test shall be clearly indicated on the report. The bulk density for Marshall Mix designs shall be tested in accordance with AASHTO T-245. The bulk density for Gyratory mix designs shall be determined in accordance with AASHTO T-312. The maximum theoretical density shall be determined in accordance with the requirements of AASHTO T-209 including fan drying per AASHTO T209 Section 15. Effective voids of the laboratory compacted specimens will be determined at a minimum of once per lot in accordance with the requirements of AASHTO T-269. Should the testing for effective air voids not meet the "Full Payment" or "No Corrective Action" requirements of Table 321-5, additional testing for laboratory air voids on the remaining sublots will be performed as necessary to determine the extent of the deficiency. Acceptance testing results will be furnished to the contractor and the supplier within five working days of receipt of samples by the acceptance laboratory.

During production, the allowable deviations from the mix design gradation targets are listed in the tables below. The allowable production tolerances may fall outside of the mix design gradation bands.

TABLE 321-3A
GRADATION ACCEPTANCE LIMITS FOR MARSHALL MIXES

Sieve Size	3/8 inch Mix	1/2 inch Mix	3/4 inch Mix	Base Mix
1 inch	---	---	---	±7%
3/4 inch	---	---	±7%	±6%
1/2 inch	---	±7%	---	---
3/8 inch	±7%	±6%	±6%	±6%
No. 8	±6%	±6%	±6%	±6%
No. 40	±4%	±4%	±4%	±4%
No. 200	±2%	±2%	±2%	±2%

TABLE 321-3B
GRADATION ACCEPTANCE LIMITS FOR GYRATORY MIXES

Sieve Size	3/8 inch Mix	1/2 inch Mix	3/4 inch Mix
3/4 inch	---	---	±7%
1/2 inch	---	±7%	±6%
3/8 inch	±7%	±6%	---
No. 8	±6%	±6%	±6%
No. 40	±4%	±4%	±4%
No. 200	±2%	±2%	±2%

If the results from a single acceptance sample fall outside of the acceptance limits in Table 321-3A or 321-3B as applicable, a second sample shall be taken and if the second acceptance sample is also outside of the acceptance limits the Contractor shall cease production of asphalt concrete. Production shall not begin again until calibration test results verify that adjustments made to materials or proportions yield a gradation that falls within acceptance limits in Table 321-3A or 321-3B as applicable.

If the asphalt binder content is within ± 0.40% of the mix design target value, the asphalt concrete will be paid for at the contract unit price. If the asphalt binder content deviates by more than ± 0.40% from the mix design target value, the deficient area will be evaluated within the sublot by coring at maximum intervals of 100 feet from the deficient sample. The asphalt content of the original deficient sample will be averaged with the asphalt binder content of the cores taken for re-evaluation to determine compliance with the acceptance requirements. If the resulting average of the asphalt binder content deviates by more than ±

0.40% from the mix design target value, then Table 321-4 shall apply to the sublot. Additional cores may be required to define the limits of the deficient area, and shall not be used for re-evaluating acceptance.

TABLE 321-4		
ASPHALT BINDER CONTENT ACCEPTANCE AND PENALTIES		
Deviation from that permitted	When the contracting agency is the owner: Payment Reduction ($ per ton of asphalt concrete)	When the contracting agency is not the owner (i.e. permits): Corrective Action
Over 0.0 to 0.1% points	$2.00	EA (see 321.10.6)
Over 0.1 to 0.2% points	$6.00	EA (see 321.10.6)
Over 0.2% points	Removal* or EA per 321.10.6	Removal* or EA per 321.10.6

If the laboratory air voids fall within a range of 2.8% to 6.2%, the asphalt concrete will be paid for at the contract unit price. If the laboratory air voids are outside of this range, the deficient area will be evaluated within the sublot by coring at maximum intervals of 100 feet from the deficient sample. The laboratory air voids of the original deficient sample will be averaged with the laboratory air voids obtained from each of the cores taken for re-evaluation to determine compliance with the acceptance requirements. If the resulting average of the laboratory air voids is outside the indicated range, then Table 321-5 shall apply to the sublot. Additional cores may be required to define the limits of the deficient area, and shall not be used for re-evaluating acceptance.

TABLE 321-5		
LABORATORY VOIDS ACCEPTANCE AND PENALTIES		
Laboratory Air Voids (Measured at N_{des} or 75 blows as applicable)	When the contracting agency is the owner: Payment Reduction ($ per ton of asphalt concrete)	When the contracting agency is not the owner (i.e. permits): Corrective Action
Less than 1.5%	Removal* or EA per 321.10.6	Removal* or EA per 321.10.6
1.5-2.0%	$2.50	EA (see 321.10.6)
2.1-2.7%	$1.00	EA (see 321.10.6)
2.8-6.2%	Full Payment	No corrective action
6.3-6.9%	$1.00	EA (see 321.10.6)
7.0-8.0%	$2.50	EA (see 321.10.6)
Greater than 8.0%	Removal* or EA per 321.10.6	Removal* or EA per 321.10.6

If an agency or Engineer is purchasing asphalt concrete directly from a commercial material supplier, the agency or Engineer will use Section 321.10, and specifically Tables 321-3A or 321-3B as applicable, 321-4 and 321-5 from Section 321.10, when determining the acceptance of the asphalt concrete with the material supplier.

321.10.3 Surface Testing: If directed by the Engineer surface drainage test shall be performed. The completed surfacing shall be thoroughly compacted, smooth and true to grade and cross-section and free from ruts, humps, depressions or irregularities. An acceptable surface shall not vary more than 1/4 inch from the lower edge of a 12-foot straightedge when the straightedge is placed parallel to the centerline of the roadway. The straightedge shall be furnished by the contractor and shall be acceptable to the Engineer.

All streets shall be water tested for drainage in the presence of the Engineer or designated representative before final acceptance. Any areas not draining properly shall be corrected to the Engineer's satisfaction at the Contractor's expense. Water for this testing shall be provided and paid for by the Contractor.

When deviations in excess of the above tolerance are found, humps or depressions shall be corrected to meet the specified tolerance, or shall be cut out along neat straight lines and replaced with fresh hot mixture and thoroughly compacted to conform with and bond to the surrounding area. Materials and work necessary to correct such deviations shall be at no additional cost to the Contracting Agency.

321.10.4 Asphalt Pavement Thickness: Asphalt Pavement thickness will be determined from cores secured from each sublot for this purpose. Such cores will be taken and measured by the Asphalt Concrete Coring Method. This method can be found at in Section 321.14. Each core location will be patched by the party responsible for the testing.

If the pavement thickness is deficient from the target thickness by 0.25 inches or less, it will be paid for at the contract unit price. If the pavement thickness deficiency is greater than 0.25 inches and the contracting agency is not the owner (i.e. permits) the following steps will apply:

(1) If the thickness deficiency of the pavement exceeds 0.25 inch, the limits of the deficient area will be evaluated by coring at maximum intervals of 100 feet from the deficient core. The thicknesses of the original deficient core will be averaged with the thicknesses of the cores taken from 100 feet on each side of it to determine compliance with the acceptance requirements. If the resulting average thickness deficiency is greater than 0.25 inch, additional cores may be required to define the limits of the deficient area, and shall not be used for re-evaluating acceptance.

(2) If the pavement thickness from step one above deviates from the target thickness by more than 0.25 inch but not more than 0.50 inch, corrective action will be required. This corrective action will consist of application of a Type II slurry seal coat in accordance to Section 715. The Contractor may present an engineering analysis outlining other proposed remedial measures for the consideration of the Engineer. The Engineer will review the engineering analysis and decide within 30 working days whether to accept the proposed remedial measures.

(3) If the pavement thickness from step one above deviates from the target thickness by more than 0.50 inch, corrective action will be required. The deficient area will be overlaid with no less than 1 inch thick lift, for the full width of the pavement to meet or exceed the designed thickness, with the appropriate end and edge milling, with a mixture approved by the Engineer. The Contractor may present an engineering analysis outlining other proposed remedial measures for the Engineer's consideration. The Engineer will review the engineering analysis and decide within 10 working days whether to accept the proposed remedial measures. If the Engineer chooses to reject the engineering analysis, the indicated overlay will be constructed by the Contractor at no additional cost to the Owner.

If the pavement thickness deficiency is greater than 0.25 inches and the contracting agency is the owner, Table 321-6 will apply.

TABLE 321-6 **ASPHALT PAVEMENT THICKNESS PAYMENT REDUCTION** **For Thickness Deficiency of More Than 0.25 inches and less than 0.50 inches**	
Specified Pavement Thickness	**Reduction in Payment or Corrective Action**
Less than 1.5 inches	50%
1.50 inches to 1.99 inches	33%
2.00 inches to 2.49 inches	25%
2.50 inches to 2.99 inches	20%
3.00 inches and over	17%

321.10.5 Density:

321.10.5.1 Pavement 1-1/2 Inches or Less in Nominal Thickness:

Compaction shall consist of a "Rolling Method Procedure" using an established sequence of coverage with specified types of compactors. A pass shall be defined as one movement of a compactor in either direction. Coverage shall be the number of passes as are necessary to cover the entire width being paved.

The rolling sequence, the type of compactor to be used, and the number of coverages required shall be as shown in Table 321-7.

TABLE 321-7				
ROLLING SEQUENCE FOR LIFT THICKNESS 1½" OR LESS				
Rolling Sequence	Type of Compactor		No. of Coverages	
	Option No. 1	Option No. 2	Option No.1	Option No. 2
Initial	Static Steel	Vibrating Steel	1	1
Intermediate	Pneumatic Tired	Vibrating Steel	4	2- 4*
Finish	Static Steel	Static Steel	1-3	1-3
* Based on the roller pattern which exhibits the best performance.				

The Contractor shall select the option for compaction and, when pneumatic-tired compactors are used will designate the tire pressure. Steel wheel compactors shall not be used in the vibratory mode for courses of one inch or less in thickness nor when the temperature of the asphaltic concrete falls below 180 degrees F. Initial and intermediate compaction shall be accomplished before the temperature of the asphaltic concrete falls below 200 degrees F.

Compaction will be deemed to be acceptable on the condition that the asphaltic concrete is compacted using the type of compactors specified, ballasted and operated as specified, and with the number of coverages of the compactors as specified.

321.10.5.2 Pavement Greater than 1-1/2 Inches in Nominal Thickness:

Achieving the required compaction is the responsibility of the contractor. The number and types of rollers is the contractor's responsibility and shall be sufficient to meet these requirements.

In-place air voids shall be determined in accordance with AASHTO T-269 utilizing cores taken from the finished pavement. The maximum theoretical density used in the determination of in-place air voids will be the average value from the acceptance samples determined for the Lot as outlined in 321.10.1.

The Engineer will designate one random test location for each sublot and the acceptance laboratory will obtain one core from that location. Regardless of sublot quantities or boundaries, a minimum of one core will be obtained per residential street and a minimum of one core per travel lane for collector and arterial streets. The outside one foot of each pass of the pavement course or any unconfined edge will be excluded from testing. The Engineer may exclude areas from the compaction lot that are not accessible by normal compaction equipment.

The Contractor will provide the traffic control to facilitate any coring operations necessary for compaction acceptance.

Cores will be taken per the Asphalt Concrete Coring Method. This method can be found in Section 321.14. Acceptance testing results will be furnished to the contractor within five working days of receipt of samples by the acceptance laboratory.

If the pavement density has in-place voids of 8.0% or less, the asphalt concrete will be paid for at the contract unit price. If the pavement density has in-place voids greater than 8.0%, the deficient area will be evaluated within the sublot by coring at maximum intervals of 100 feet from the deficient core(s). If both cores in a sublot are deficient, 3 to 4 additional cores may be necessary to re-evaluate acceptance. The in-place voids of all the original core(s), whether deficient or acceptable, will be averaged with the in-place voids of the cores taken for re-evaluation to determine compliance with the acceptance requirements. If the average of the in-place voids is greater than 8.0% then Table 321-8 shall apply to the sublot. Additional cores may be required to define the limits of the deficient area, and shall not be used for re-evaluating acceptance.

TABLE 321-8		
PAVEMENT DENSITY PENALTIES		
Limits of In-place Air Voids for lift thicknesses greater than 1.5 inches	When the contracting agency is the owner: Payment Reduction ($ per ton of asphalt concrete)	When the contracting agency is not the owner (i.e. permits): Corrective Action
8.1% to 9.0%	$4.00	EA
9.1% to 10.0%	$6.00	EA and Type II Surry Seal
10.1% to 11.0%	Removal* or EA per 321.10.6	Removal* or EA per 321.10.6
Greater than 11.0%	Removal	Removal

*Notes: The Contractor shall remove and replace the entire sublot that is deficient. Removal for In-place Air Voids greater than 11.0% is not eligible for Section 321.10.6.

321.10.6 Engineering Analysis (EA): Within 10 working days after receiving notice that a lot or sublot of asphalt concrete is deficient and is found to fall within the "Removal or EA" band per Table(s) 321-4, 321-5, and/or 321-8 the contractor may submit a written proposal (Engineering Analysis) to accept the material in place at the applicable penalties along with possible remediation(s) listed in the "Removal or EA" category. Engineering Analysis can also be proposed for non-removal categories of "Corrective actions" when the contracting agency is not the owner (i.e. permits).

The Engineering Analysis shall contain an analysis of the anticipated performance of the asphalt concrete if left in place. The Engineering Analysis shall also detail the effect of any proposed corrective action to the material(s) in place as it relates to the in-place material's performance. The Engineering Analysis shall be performed by a professional engineer experienced in asphalt concrete testing and mix designs. If the lot or sublot is submitted for referee testing by the contractor, the ten working days allowed to prepare an engineering will begin upon notification of referee test results.

When an Engineering Analysis recommends that a specific lot or sublot should not be removed, the Engineering Analysis will recommend that the following penalties (Table 321-9) be paid when the contracting agency is the owner, for the specific criteria being reviewed by the EA.

TABLE 321-9		
ENGINEERING ANALYSIS PENALTIES for REMOVAL* LOTS/SUBLOTS LEFT IN-PLACE		
Acceptance Criteria	**Acceptance Limits**	**Penalty When Contracting Agency is the Owner ($/Ton)**
Asphalt Binder Content	Over 0.2% points from that Permitted	$9.00
Laboratory Air Voids (Measured at N_{des} or 75 blows as applicable)	Less than 1.5% or Greater Than 8.0%	$3.75
Limits of In-place Air Voids	10.1% to 11.0%	$9.00

Within 15 working days, the Engineer will determine whether or not to accept the contractor's proposed Engineering Analysis.

321.11 REFEREE:

In the event the contractor elects to question the acceptance test results for either asphalt binder content, laboratory air voids, density or a combination thereof for a sublot, the Contractor may make a written request for additional testing of that sublot. Any request for referee testing must describe the contractor's reasons for questioning the validity of the original acceptance results and must clearly describe which set of acceptance tests are in question. The Contractor will engage an independent laboratory (at the Contractors own expense) who is accredited by AAP in all of the acceptance test methods. The independent laboratory shall be acceptable to the Engineer and shall perform a new set of acceptance tests as required by Section 321.10 representing the area or set of tests in question. The results of these determinations will be binding on both the contractor and the agency.

These tests may include asphalt binder content, aggregate gradation, Marshall or Gyratory unit weight, maximum theoretical unit weight, laboratory air voids and in-place air voids (compaction). Samples for referee testing shall come from representative samples obtained from the completed pavement, as directed by the Engineer.

The number of samples taken will be the same as specified in Section 321.10. The independent laboratory shall compile the test results and transmit them to both the Engineer and the contractor. The independent laboratory shall include a report signed by an Engineer registered in the State of Arizona, who is experienced in asphalt concrete testing and mix design development. The signed report shall give an opinion that the material evaluated does or does not comply with project specifications, shall clearly describe any deficiencies, and the results will be binding between all parties.

321.12 MEASUREMENT:

Asphalt concrete pavement will be measured by the ton, or by the square yard, for the mixture actually used as allowed above, which shall include the required quantities of mineral aggregates, asphalt binder, and mineral admixture. Measurement shall include any tonnage used to construct intersections, roadways, streets, or other miscellaneous surfaces indicated on the plans or as directed by the Engineer.

321.13 PAYMENT:

The asphalt concrete measured as provided above will be paid for at the contract price per ton or square yard, as adjusted per Section 321.10, which price shall be full compensation for the item complete, as herein described and specified.

Payment for tack coat will be by the ton diluted, based on the rate of application, as directed by the Engineer.

No payment will be made for any overrun in quantity of asphalt concrete in excess of 10 percent based on actual field measurement of area covered, design thickness, and the mix design unit weight. The calculations and payment for overrun will be by individual pay item. To compensate or adjust for a thickness deficiency in an underlying asphalt concrete course, the Engineer may authorize a quantity increase in excess of 10 percent for a subsequent asphalt concrete course. In such cases, the quantity in excess of 10 percent will be paid for at the lowest unit price.

Except as otherwise specified in the special provisions, no separate payment will be made for work necessary to construct miscellaneous items or surfaces of asphalt concrete.

321.14 ASPHALT CORE METHOD: Core Drilling of Hot Mix Asphalt (HMA) for Specimens of 4" or 6" diameter

321.14.1 Scope: This method is to establish a consistent method of the use of a diamond bit core to recover specimens of 4 or 6 inch diameter for laboratory analysis and testing. The method will require the use of: water, ice (bagged or other suitable type), dry ice, and a water-soap solution to be utilized when coring asphalt rubber concrete. Individuals doing the specimen recovery should be observing all safety regulations from the equipment manufacturer as well as the required job site safety requirements for actions, and required personal protective equipment.

321.14.2 Core Drilling Device: The core drilling device will be powered by an electrical motor, or by an acceptable gasoline engine. Either device used shall be capable of applying enough effective rotational velocity to secure a drilled specimen. The specimen shall be cored perpendicularly to the surface of pavement, and that the sides of the core are cut in a manner to minimize sample distortion or damage. The machinery utilized for the procedure shall be on a mounted base, have a geared column and carriage that will permit the application of variable pressure to the core head and carriage throughout the entire drilling operation. The carriage and column apparatus shall be securely attached to the base of the apparatus; and the base will be secured with a mechanical fastener or held in place by the body weight of the operator. The core drilling apparatus shall be equipped with a water spindle to allow water to be introduced inside of the drill stem while operating. The cutting edge of the core drill bit shall be of hardened steel or other suitable material with embedded diamond chips in the cutting surface. The core barrel shall be of sufficient diameter to secure a specimen that is a minimum of four or six inches or whichever is prescribed for necessary testing. The core barrel shall not be missing more than one of the teeth used for cutting; if so it shall be discarded and another barrel shall be used. The core barrel shall also be a minimum of two inches longer than the anticipated depth of pavement in accordance with project paving plans.

321.14.3 Accessory Equipment: A sufficient supply of ice and dry ice shall be provided to sufficiently cool the pavement prior to securing the samples from the designated areas in the pavement. The ice should also be used to adjust the temperature of the water used to cool the core bit. A water supply (usually a plastic 35 – 55 gal drum) with sufficient hose to introduce the water into and through the spindle of the coring device by gravity feed. The drum should be white or light in color to minimize excessive thermal heating of the water (*for coring of asphalt rubber cores see Note 1*). At no time shall the water utilized in the coring operation exceed 65° F during the coring operation. Ice shall be utilized o ensure the temperature control of the water being introduced during the cutting operation. An ice chest or other suitably insulated container that can maintain a temperature of less than 70° F shall be used to secure the specimens during transport. The container will be equipped with flat shelving that will support the drilled cores throughout the entire specimen dimension during transport back to the testing facility.

Miscellaneous hand tools to remove the drilled specimen from the drill hole or the core barrel taking great care in not disturbing the specimen more than necessary (refer to fig. 1 in ASTM D5361-05).

321.14.4 Process: The pavement surface at the time of coring shall not exceed a temperature of 90° F; the pavement shall be conditioned with ice or dry ice to ensure that this requirement is met. Immediately after it has been ensured that the pavement has dropped to the required temperature, core drilling shall begin. The operator will then apply an even and continuous pressure (Note 2) to penetrate through the full depth of the pavement. The operator will concurrently ensure that enough water is moving over the core surface as to adequately remove any and all cuttings that could damage the drilled core. After the pavement thickness has been penetrated the core shall be carefully removed from either the drill hole or the core barrel and be immediately transferred to an ice chest or other suitable container. Each individual core shall be placed on a shelf in the cooler with the exposed side of the specimen facing down, or the "top side" down. If the specimen is a two lift core, the only acceptable means of separating lifts is with a power or other acceptable wet saw type of equipment (conforming to ASTM D5361-05); however, at no time shall cores be split using a mallet and screwdriver or metal straight edge when being tested for bulk density. Perpendicularity of the specimen shall be checked in the field after the specimen has been extracted from the surface. The core operator shall hold the core up to eye level and place the core top side down in a "speed square" or small carpenters square. The specimen placed in the square shall not depart from perpendicular to the axis more than 0.5^{o} (approximately equivalent to 1/16 of an inch in 6 inches). If the specimen is outside of this distance from square it shall be discarded in the field and another sample cored that falls within tolerance. The cores upon arriving at the laboratory for testing shall be carefully cleaned and measured for thickness in accordance with ASTM D3549. A speed square shall be utilized to measure perpendicularity as compared to a 90° degree angle and shall not depart from perpendicular to the axis more than 0.5^{o} (approximately equivalent to 1/16 of an inch in 6 inches). All remaining testing shall be done within the parameters of the current project and / or agency required specification.

- End of Section -

*Note 1 – It should be noted that when the material to be cored is a rubberized asphalt mixture a wetting agent such as liquid dish soap shall be added to the water barrel to hinder the material from sticking or allowing the binder to spread during coring.
*Note 2 – This refers to pressure exerted on the core barrel and machine during the coring process. Too much pressure can cause damage to the core barrel and the motor; and too little pressure can cause a glazing of the diamonds, reducing cutting efficiency and premature wear of the barrel.

SECTION 324

CEMENT CONCRETE STREET PAVEMENT

324.1 DESCRIPTION:

This item shall consist of construction of a pavement composed of plain jointed Portland cement concrete on a prepared subgrade. The Contractor shall furnish all labor, materials and equipment necessary for the construction of the pavement in accordance with these specifications and in reasonably close conformity to the lines, grades, thicknesses and details indicated by the plans or as established by the Engineer. All tests shall be performed by a laboratory approved by the Engineer.

324.2 MATERIALS:

324.2.1 Portland Cement Concrete: Portland cement concrete shall conform to the applicable requirements of MAG Standard Specifications Section 725 and the additional requirements of this Section.

Concrete shall develop a modulus of rupture of not less than 520 psi within 14 days after placement and not less than 650 psi at 28 days' age as determined by tests of specimens fabricated in accordance with ASTM C31 and tested in accordance with ASTM C78 procedures. The Contractor shall submit data acceptable to the Engineer at least 30 days in advance of the start of concrete paving operations which demonstrate that concrete produced with materials and proportions as proposed for use in the construction will conform to the modulus of rupture requirements of these specifications. The data shall include results of compressive strength tests conducted at the same age as modulus of rupture tests to establish the correlation which can be expected between the flexural and compressive strength properties of the concrete. The Engineer may, at his option, use compressive strength tests of specimens fabricated in accordance with ASTM C31 and tested in accordance with ASTM C39 to verify conformance to the modulus of rupture requirements of these specifications.

The maximum concrete slump shall be as determined by the approved mix design.

324.2.2 Concrete Materials: Portland cement conforming to the requirements of ASTM C150 for Type III, and low-alkali, may be used at the Contractor's option. Aggregates shall be crushed rock or gravel conforming to the requirements of ASTM C33. Coarse aggregate gradation shall conform to requirements for Size No. 57. Fine aggregates shall have an average sand equivalent of not less than 75 when tested in accordance with the requirements of AASHTO T-176 or ASTM D2419.

324.2.3 Reinforcement: Tie bars shall be deformed billet steel reinforcing bars conforming to the requirements of ASTM A615, Grade 40.

Dowel bars shall be plain round bars conforming to the requirements of ASTM A615, Grade 40. One-half the length of each dowel bar shall be painted with one coat of tar paint.

Metal sleeves of an approved design shall be provided for use with dowel bars. Sleeves shall cover 2 inches, plus or minus 1/4 inch, of the dowel, shall have a closed end with a suitable stop to hold the end at least 1 inch from the end of the bar, and shall be designed to prevent collapse during construction. An approved basket support shall be used to hold bars parallel to pavement surface.

324.2.4 Curing Materials: Materials for curing concrete shall conform to the requirements of Section 726.

324.2.5 Joint Materials: Joint sealant shall be a one component, hot-poured type, conforming to the requirements of ASTM D3406.

Back-up rod or tape and bond breakers provided to control the depth of sealant, achieve the desired shape factor, support sealant against indentation and sag, or to prevent bond of the sealant to the bottom concrete surface shall be compatible with the joint sealant material.

Other pour-type joint sealants conforming to the requirements of Subsection 729.2 may be used if approved by the Engineer.

Preformed expansion joint filler shall conform to the requirements of ASTM D1751.

SECTION 332

PLACEMENT AND CONSTRUCTION OF ASPHALT EMULSION SLURRY SEAL COAT

332.1 DESCRIPTION:

The work covered by this specification consists of furnishing all labor, equipment, and materials necessary to perform all operations required for the application of an asphalt emulsion slurry surface.

NOTE: THESE SPECIFICATIONS DO NOT COVER THE APPLICATION OF COAL TAR SLURRY SEALS.

332.2 MATERIALS:

The asphalt emulsion material, mineral aggregate and mineral filler shall be as specified in Section 715.

332.3 EQUIPMENT:

332.3.1 General: When requested by the Engineer, descriptive information on the slurry seal mixing and applications equipment to be used will be submitted for approval no less than 7 days before the work starts.

332.3.2 Self Contained Slurry Machine: The mixing machine will be a continuous flow type. It will be capable of accurately delivering a predetermined proportion of pre-wetted aggregate, mineral filler, water and asphalt emulsion to the mixing chamber and discharging the thoroughly blended mixture on a continuous basis. The mixing machine will be equipped with a mineral filler feeder. The feeder will have an accurate metering device or method to introduce a predetermined proportion into the mixer. The filler will be introduced into the mixing chamber at the same time and location as the aggregate.

The mixing machine will be equipped with a water pressure system and fog-type spray bar, adequate for complete water fogging of the surface to be sealed.

The mixing machine will be mounted on a truck or other vehicle capable of producing evenly controlled low rates of speed throughout the operation to ensure the slurry is spread evenly and all cracks are filled.

332.3.3 Slurry Spreading Equipment: Attached to the mixer machine shall be a mechanical type squeegee spreader equipped with flexible material in contact with the surface to prevent loss of slurry from the distributor. It shall be maintained to prevent loss of slurry on varying grades and crown by adjustments to assure uniform spread. There shall be a steering device and a flexible strike-off. The spreader box shall have an adjustable width. The box shall be kept clean. Build-up of asphalt and aggregate on the box shall not be permitted. The use of burlap drags or other drags shall be approved by the Engineer.

332.3.4 Rollers: Rollers shall be approved by the Engineer.

332.3.5 Cleaning Equipment: Power brooms, pick-up brooms, air compressors, water flushing equipment, and hand brooms shall be suitable for cleaning the surface and cracks of the old surface.

332.3.6 Auxiliary Equipment: Hand squeegees, shovels, and other equipment shall be provided as necessary to perform the work.

332.4 PREPARATION OF THE SURFACE:

332.4.1 Immediately before applying the slurry, the area to be surfaced shall be cleaned of dirt, loose material, and other objectionable material. In urban areas, the surface shall be cleaned with a self-propelled pick-up sweeper. In rural areas, power brooms may be used. When necessary, cleaning shall be supplemented by hand brooms. Water flushing will not be permitted in areas where cracks are present in the pavement surface.

The slurry shall not be applied until an inspection of the surface has been made by the Engineer and he has determined that it is suitable.

332.4.2 Tack Coat: When specified, a tack coat shall be applied in accordance with Section 329 using the same type and grade of asphalt emulsion as specified for the slurry seal.

332.4.3 Water Fogging: When required by local conditions, the surface, directly ahead of the slurry box, shall be pre-wetted by fogging. The fogging shall be accomplished in such a manner that the entire surface is damp with no apparent flowing water or puddles.

332.5 WEATHER LIMITATIONS:

The slurry seal shall not be applied unless the pavement temperature is at least 45°F. and rising. The mixture shall not be applied during unsuitable weather.

332.6 PROTECTION OF UNCURED SURFACE:

Adequate means shall be provided by the Contractor to protect the uncured product. Any damage done to the product shall be repaired at the Contractor's expense.

332.7 MIXING AND APPLICATION:

The mixing time shall not exceed four minutes. Excessive mixing will not be allowed. The resulting mixture shall have the desired consistency, when placed on the surface. If breaking, hardening, segregation, balling or lumping occurs during the mixing process, the batch will be discarded.

A sufficient amount of slurry shall be carried in all parts of the spreader at all times so that a complete coverage is obtained.

No streaks caused by oversized aggregate shall be left in the finished surface. Build-up on longitudinal and transverse joints will be kept to a minimum. Approved squeegees shall be used to spread slurry in areas nonaccessible to the slurry mixer.

332.8 ROLLING:

As soon as the asphalt slurry has been set sufficiently to prevent any material from being picked up, it shall be rolled until all ridges have been ironed out and a uniform surface is obtained.

332.9 MEASUREMENT:

Quantities and materials for this work will be paid for at the contract price per unit of measurement for each of the following pay items as indicated in the proposal.

(A) Bituminous tack coat if specified	Ton (Diluted)
(B) Emulsified asphalt for slurry	Ton (Undiluted)
(C) Aggregate for slurry	Ton (Surface Dry)

- End of Section -

345.5 MEASUREMENT:

The quantities measured will be the actual number of frames, covers and value boxes of each type, adjusted and accepted.

345.6 PAYMENT:

The quantities, as determined above will be paid for at the contract price per unit of measurement respectively, for each of the particular items listed in the proposal. The payment shall be compensation in full for all materials, labor, equipment and incidentals necessary to complete the work.

- End of Section -

SECTION 350

REMOVAL OF EXISTING IMPROVEMENTS

350.1 DESCRIPTION:

This work shall consist of removal and disposal of various existing improvements, such as pavements, structures, pipes, conduits, curbs and gutters, and other items necessary for the accomplishment of the improvement.

350.2 CONSTRUCTION METHODS:

350.2.1 Utilities

The removal of existing improvements shall be conducted in such a manner as not to injure active utilities or any portion of the improvement that is to remain in place.

A utility may be abandoned in place below a new major structure that is part of the work only if approved by the Agency and solidly filled with grout using methods approved by the Agency. All abandoned utilities to remain and the approved abandonment method shall be noted on the installation record drawings.

Utilities to be removed by the Contractor shall be disconnected and taken out in accordance with the requirements of the utility owner to the limits shown on the plans. Utility removal shall not be performed until a release has been obtained from the utility stating that their respective service connection and appurtenant equipment have been disconnected, removed or sealed and plugged in a safe manner.

The Engineer shall be notified when utilities are encountered that are not shown on the plans.

350.2.2 Others

Sidewalks shall be removed to a distance required to maintain a maximum slope for the replaced portion of sidewalk, for one inch per foot and all driveways shall be removed to a distance as required by standard details.

Portland cement concrete pavements, curbs and gutters and sidewalks designated on the plans for removal shall be saw-cut at match lines, in accordance with Section 601 and removed.

Portions of asphalt concrete pavements designated on the plans for removal shall be done in accordance with Section 336.

Removal of trees, stumps, roots, rubbish, and other objectionable materials in the right-of-way shall be done in accordance with Section 201.

350.2.3 Backfill and Disposal

Backfill of all excavated areas below structures shall be in accordance with Section 206.4. Backfill and compaction of all other excavated areas shall be compacted to the densities as prescribed in Section 601 (trenches) or Section 211 (holes, pits or other depressions).

All surplus materials shall be immediately hauled from the jobsite and disposed of in accordance with Section 205.6.

350.3 MISCELLANEOUS REMOVAL AND OTHER WORK:

This work shall include, but not be limited to the following, where called for on the plans:

(A) Relocate existing fence and gate.

(B) Remove and reset mail boxes.

(C) Remove signs and bases in right-of-way.

(D) Remove planter boxes, block walls, concrete walls, footings, headwalls, irrigation structures, and storm water inlets.

(E) Install plugs for pipes and remove existing plugs as necessary for new construction.

(F) Remove wooden and concrete bridges.

(G) Remove median island slabs.

(H) Remove pavements and aggregate base where called for outside the roadway prism.

350.4 PAYMENT:

Payment for removals will be made at the unit proposal price which price shall be full compensation for the item complete, as described herein or on the plans.

- End of Section -

SECTION 355

UTILITY POTHOLES-KEYHOLE METHOD

355.1 DESCRIPTION:

This specification covers the requirements for coring, vacuum excavation, backfilling, and reinstatement of the asphalt core into asphalt pavement.

355.2 EXCAVATION

Excavation requires coring a circular hole through asphalt pavement using drilling/coring equipment and removal of the intact asphalt pavement core. The vertical alignment of the coring operation shall be perpendicular to the horizon and cutting shall be extended the full depth of the existing pavement section.

Pavement cores shall not be greater than 24 inches in diameter, shall not be spaced closer than 3 feet between cores (edge to edge), shall not contain a joint or any pavement cracks greater than 1/8-inch wide, and shall only be obtained from pavements where the asphalt concrete section is at least 4 inches thick.

Contractor shall place a temporary mark (paint or chalk) on the pavement core and adjacent pavement prior to cutting to insure that the pavement core when replaced will have the same orientation as found in the original pavement.

Pavement cores shall be either removed from the work site or stored in a safe and secure on-site location. The cores shall be made readily available for reinstatement into the pavement.

Soil shall be removed by air/vacuum extraction methods to expose utilities. The zone of soil removal shall remain essentially within a vertical plane extending below the edges of the core hole.

The Contractor shall dispose of all excess materials.

355.3 BACKFILL AND COMPACTION

355.3.1 Backfill Using Mechanical Compaction: Backfill shall be aggregate base per Section 702 or native soil per Section 601.4.3, placed in maximum 6 to 8-inch loose lifts.

Backfill compaction shall be determined by use of a compression wave amplitude monitoring device manufactured specifically for the purpose of measuring soil compaction. This device shall measure the compression wave amplitude as compaction progresses using below grade piezoelectric transducer wave sensors and an above-grade electronic monitor. The device shall signal the operator of successful compaction (the compaction wave amplitude becomes asymptotic for continued compaction effort) for each lift.

At time of compaction backfill material shall have sufficient available moisture to be compacted based on the physical appearance (soil ball) method as specified in USDA Soil Conservation Service Agricultural Information Bulletin 199, described as follows:

> Firmly squeeze a palm-size sample of soil into a ball by hand. Granular soils with sufficient available moisture will tend to ball under pressure, but seldom holds together for long. Cohesive soils with sufficient available moisture will form a ball that can be rolled into approximate ¼” wide ribbons between the palms of the hands without breaking apart, leaving no free water on the hand.

A compaction sensor shall be placed at the bottom of the first loose lift. A new sensor shall be placed for every 48 inches of compacted fill depth.

Pneumatic compaction equipment (pneumatic rammers or equivalent) shall be used for compaction of the backfill material. The size of the compactor shall not exceed one-half the diameter of the hole.

Mechanical compaction on each lift shall be continued until the electronic monitor signals that compaction is complete. A new lift shall not be placed until a positive signal has been received. Remove backfill soil and sensor if the monitor does not give a positive compaction signal after repeated compaction efforts. Repeat backfilling and compaction with a new sensor.

Contractor shall provide compaction documentation to the Agency upon request.

355.3.2 Slurry Backfill: If mechanical compaction is not used, the Contractor shall use ½-sack CLSM as backfill in accordance with Section 728.

355.3.3 Leveling Course: A 1-1/2-inch to 2-inch thick leveling course of compacted crushed gravel meeting the requirements of ASTM C33, No. 8 coarse aggregate shall be placed above the backfill and directly below the asphalt concrete pavement section.

355.4 PAVEMENT RESTORATION

The pavement surface shall be restored to its original condition by setting the reinstated pavement core flush with and in its original orientation.

Bonding agent meeting the requirements of Section 708 shall be used for pavement core reinstatement. Excess bonding material shall be removed from the restored pavement surface. A "patched" appearance shall be avoided in surface restoration wherever possible.

The contractor shall reinstate the pavement core within 24 hours of cutting the pavement. Holes left open longer than 24 hours after cutting shall be covered with an approved steel road plate capable of supporting traffic loads. The steel plate must be rounded with a fitted collar that, when inserted into the hole, will prevent the steel plate from tipping, tilting, bouncing or spinning out of the hole under traffic conditions. An asphalt mix shall be used to ramp pavement up to the steel plate along all edges.

355.5 SURFACE TOLERANCES

The reinstated core shall be flush and level with the adjacent pavement. Gaps attributable to the positioning of the core shall be less than 1/16-inch between the bottom of a minimum 3-foot long straightedge and the surface of the pavement in any direction on the surface of the keyhole core, except across the pavement crown or drainage gutters.

355.6 DEFICIENCIES

Where the pavement core is found to be fractured or defective upon removal, or becomes damaged after removal and prior to reinstating, the defective or damaged core shall not be used to reinstate the pavement. Pavement repair shall be performed in accordance with Detail 212, Type A Pavement Repair.

A pavement core is considered unacceptable when one of the following conditions exist:

(a) The core contains any vertical cracks wider than 1/8-inch extending full depth or partial depth through the core; or

(b) Any deteriorated piece of the core is larger than 10 percent of the overall area of the core.

(c) Two or more successive layers of asphalt concrete in the core become horizontally delaminated and cannot be rebounded to each other with the bonding compound.

All unacceptable pavement cores shall be removed from the job site.

355.7 MEASUREMENT

Each acceptable utility pothole repair shall be counted. No distinction shall be made based on size of the utility pothole or method of repair.

355.8 PAYMENT

Payment at the contract price for utility pothole repair complete in place shall be full compensation for all labor, equipment and material required for a complete in place installation. Payment includes traffic control and disposal of all excess materials.

- End of Section -

SECTION 360

TELECOMMUNICATIONS INSTALLATION

360.1 DESCRIPTION:

This work shall consist of the installation of underground telecommunications facilities within the public right-of-way.

360.2 TRENCHING, BACKFILL AND RESTORATION:

All work shall be done in accordance with Section 601.

360.3 CABLE INSTALLATION:

(A) "Trunk Lines" Cable providing telecommunications service by connecting regions or states or by connecting central offices within a metropolitan area. Such cable shall be installed as described below:

(1) If the cable is to be installed within an open trench, the cable shall be placed within schedule 40 PVC conduit or equal with a minimum inside diameter of 4 inches. The conduit shall be buried at a minimum depth of 48 inches below finished grade measured to the top of the conduit. A color coded plastic warning tape with a minimum thickness of 5 mil and a minimum width of 3 inches shall be installed in the trench and centered over the PVC conduit at a depth of from 18 to 30 inches below finish grade.

(2) Cable crossings under existing paved streets shall be accomplished by jacking or boring unless open trenching is authorized by the Engineer or Agency. The cable shall be placed within a schedule 40 PVC conduit or better at a minimum depth of 48 inches.

(B) Telecommunications cables other than "trunk lines" shall be installed as described below.

(1) If a cable is to be installed within the right-of-way of an arterial or collector street, it shall be placed at a minimum depth of 36 inches below finished grade. A color coded plastic warning tape as described in "A" shall be placed 18 inches below the surface.

(2) If a cable is to be installed within the right-of-way of a local/residential street it shall be placed at a minimum depth of 24 inches below finished grade.

(3) Cable crossings under existing, paved streets shall be accomplished by jacking or boring unless open trenching is authorized by the Engineer or Agency.

360.4 CABLE LOCATING (FIBER OPTIC):

If a cable which is to be installed is fiber optic a tracing or locating wire shall be installed with the cable.

360.5 PAYMENT:

Payment will be made at the contract unit price bid per lineal foot.

- End of Section -

This Page is Reserved for Future Use

PART 400

RIGHT-OF-WAY AND TRAFFIC CONTROL

Section	Last Revised	Title	Page
401	1998	Traffic Control	401-1
405	1998	Monuments	405-1
410	1998	Precast Safety Curbs	410-1
415	2013	Flexible Metal Guardrail	415-1
420	1998	Chain Link Fences	420-1
424	1998	Parkway Grading	424-1
425	1998	Topsoils	425-1
430	1998	Landscaping and Planting	430-1
440	1999	Sprinkler Irrigation System Installation	440-1

This Page is Reserved for Future Use

SECTION 415

FLEXIBLE METAL GUARDRAIL

415.1 DESCRIPTION:

The work under this section shall consist of furnishing all materials, constructing new guardrail, and delineating guardrail sections at the locations shown on the plans.

Guard rail end treatments shall be as specified on the plans or special provisions.

415.2 MATERIALS:

The rail elements, bolts, nuts and other fittings shall conform to the specifications of AASHTO M 180, except as modified in this section. The rail metal shall conform to AASHTO M 180, Type I, Class A and in addition to the requirements of AASHTO M 180, shall withstand a cold bend, without cracking of 180 degrees around a mandrel of a diameter equal to 2 1/2 times the thickness of the plate.

Three certified copies of mill test reports of each heat from which the rail element is formed shall be furnished to the Engineer.

All materials shall be new, except as otherwise noted on the plans or special provisions.

Railing Parts furnished under these specifications shall be interchangeable with similar parts regardless of source. All surfaces of guardrail elements that are exposed to traffic shall present a uniform, pleasing appearance and shall be free of scars, stains or corrosion.

Nails shall be 16 penny common galvanized.

Bolts shall have shoulders shaped to prevent the bolts from turning.

Unless otherwise specified the rail elements, terminal sections, bolts, nuts, and other fittings shall be galvanized in accordance with Section 771. Where galvanizing has been damaged, the coating shall be repaired in accordance with Section 771.

Guardrail reflector tabs shall be either 3003-H14 Aluminum strip 0.063 ± 0.004 inches thick, or steel strip 0.078 ± 0.008 inches thick galvanized in accordance with ASTM A 653 coating designation G 90. The reflector material shall be high-reflectivity sheeting, either silver-white or yellow and shall conform to the requirements of Arizona State Department of Transportation Standard Specifications for Road and Bridge Construction. Adhesive for sheeting attachment to the metal tab shall be of the type and quality recommended by the sheeting manufacturer. Reflector tabs shall conform to the Reflector Tab Detail of Maricopa County Department of Transportation Standard Detail 3002.

Timber for posts and blocks shall be rough sawn (unplanned) or S4S with the nominal dimensions indicated. Any species or group of woods graded in accordance with the requirements for Timber and Posts of the Western Wood Products Association may be used. Timber shall be No. 1 or better, and the stress grade shall be as follows:

6” by 8” Post and Block	1200 psi
8” by 8” Post and Block	900 psi
10” by 10” Post and Block	900 psi

When the plans show guardrail systems using 8” by 8” timber posts and blocks, the Contractor may use 8 1/4” nominal size posts and blocks with a stress grade of 825 pounds per square inch. Substitution of 8” by 8” posts for 6” by 8” post may be approved on a per project basis by the Engineer.

At the time of installation, the dimensions of timber posts and blocks shall vary no more than plus or minus 1/2” from the nominal dimensions as specified on the project plans. The size tolerance of rough sawn block in the direction of the bolt holes shall vary no more than plus or minus 3/8”.

All timber shall have a preservative treatment as per the requirements of AASHTO M 133.

Structural steel shapes shall conform to the requirements of ASTM A36 and be galvanized in conformance with the appropriate

requirements of AASHTO M 111. Dimensions shall meet the dimensional requirements of the American Institute of Steel Construction.

Steel tubes shall conform to the material requirements of ASTM A500 or A501 and be galvanized in conformance with the requirements of AASHTO M 180, Type 1.

415.3 CONSTRUCTION REQUIREMENTS:

415.3.1 General: The construction of the various types of guardrail shall include the assembly and erection of all component parts complete at the locations shown on the project plans or as directed by the Engineer.

Only one type and size of post and block shall be used for any one continuous length of guardrail.

Terminal sections shall be installed in accordance with the manufacturer's recommendations.

Workmanship shall be equivalent to good commercial practice and all edges, bolt holes and surfaces shall be free of torn metal, burrs, sharp edges and protrusions.

The various types of guardrail shall be constructed with wood posts and wood blocks, except as otherwise noted on the plans.

The bolted connection of the rail element to the post shall withstand a 5,000 pound pull at right angles to the line of the railing. All metal work shall be fabricated in the shop. No punching, cutting or welding shall be done in the field, except as provided for by the project plans. All metal cut in the field shall be cleaned and the galvanizing repaired in accordance with Section 771.

Where field cutting or boring of wood posts and blocks is permitted, the affected areas shall be thoroughly swabbed with at least two passes of the same type of wood preservative as initially used.

Where wood posts with rectangular sections are used, the posts shall be set so that the longest dimension is perpendicular to the rail.

All bolts shall extend beyond the nuts a minimum of two threads, except that all bolts adjacent to pedestrian traffic shall be cut off flush to the nut.

Bolts extending more than 2" beyond the nut shall be cut off to less than ½" beyond the nut.

Unless otherwise shown on the plans, bolts shall be torqued as follows:

Diameter of Bolt	Torque, Foot/Pounds
5/8"	45-50
3/4"	70-75
7/8" and larger	120-125

All bolts, other than those specified to be torqued, shall be securely tightened.

When guardrail is being constructed under traffic, the work shall be conducted so as to constitute the least hazard to the public. Guardrail work shall be performed in the direction of traffic flow when feasible.

Any section of guardrail that is removed for modification shall be replaced within five calendar days of the date the guardrail is removed, unless otherwise directed by the Engineer. At the end of each day, incomplete guardrail sections having an exposed end toward oncoming traffic shall have an appropriate temporary protective end treatment acceptable to the Engineer set securely in place together with approved overnight traffic control devices set in place.

415.3.2 Delineation: The maximum spacing between reflector tabs shall not exceed six posts. The slotted part of the tab shall be installed under the mounting bolt head so that the Reflectorized surface of the tab faces oncoming traffic. The exposed ends of the slotted part of the tab shall be bent up against and then over the top of the bolt head. The color of the reflective portion of the barrier markers shall conform to the color of the adjacent edge line. Silver-faced reflector tabs shall be installed on the right

hand side of all roadways, and yellow-faced tabs shall be installed on the left-hand side of one-way, or median divided roadways.

All guardrail delineation shall be installed in accordance with the manufacturer's recommendations and as specified herein.

415.3.3 Roadway Guardrail: Wood posts shall be used for new guard rail installations unless otherwise indicated by plans or special provisions. Wood posts shall either be driven or placed in manually or mechanically dug holes; however, driven posts will not be permitted at locations where damage to the curb, gutter, sidewalk, buried items, shoulders or pavement might occur. The Engineer will be the sole judge as to whether driving of posts will be allowed. Driving of posts shall be accomplished in a manner that will prevent battering, burring, or distortion of the post. Any post which is damaged to the extent it is unfit for use in the finished work, as determined by the Engineer, shall be removed and replaced at no additional cost to the Agency.

The posts shall be firmly placed in the ground. The space around posts shall be backfilled with selected earth, free of rock, placed in layers approximately 4 inches thick and each layer shall be moistened and thoroughly compacted to the density of the surrounding material.

Where pavement is disturbed in the construction of guardrail, the damaged surfacing shall be repaired as approved by the Engineer.

Where a culvert or other obstacle is at an elevation which would interfere with full depth post placement, guardrail installation shall comply with requirements of Section 415.3.4 Bolted Guardrail Anchors or Section 415.3.5 Nested Guardrail.

Wood blocks shall be toe nailed to the wood post with one 16 penny galvanized nail on each side of the top of the block. Wood blocks shall be set so that the top of the block is no more than ½” above or below the top of the post, unless otherwise shown on the project plans.

Rail elements shall be spliced at 25 foot intervals or less. Rail elements shall be spliced at posts unless otherwise shown on the project plans and shall be spliced by lapping in the direction of traffic in the nearest adjacent lane. Rail elements at joints shall have full bearing. When the radius of curvature is 150 feet or less, the rail elements shall be shop curved.

The Contractor shall dispose of surplus excavated material remaining after the guard railing has been constructed.

415.3.4 Bolted Guardrail Anchors: Where the elevation of the top surface of a concrete box culvert or other similar installation prevents the placement of a post of the specified length, the posts shall be shortened and anchored in accordance with Maricopa County Department of Transportation Standard Detail 3010.

415.3.5 Nested Guardrail: This work shall consist of furnishing and constructing nested guardrail, Type 1, 2, or 3, as shown in Maricopa County Department of Transportation Standard Details 3008-1 through 3008-3.

415.3.6 Guardrail to Structure Transitions: Guardrail transitions shall be constructed in accordance with requirements shown on the plans and special provisions.

415.4 MEASUREMENT:

The limits of measurement for roadway guardrail shall be as detailed in Maricopa County Department of Transportation Standard Detail 3016, except as otherwise noted on the plans or special provisions. Guardrail, of the type shown on the project plans, will be measured by the linear foot along the face of the rail element from center to center of posts, exclusive of guardrail terminals, guardrail end terminal assemblies, nested guardrail (Types 1, 2 and 3) and guardrail transitions.

Delineation is considered a part of installation of guardrail and hence will not be measured as a separate item.

The accepted quantities of guardrail posts secured with bolted guardrail anchors will be measured by the unit each.

Nested guardrail, Types 1, 2, or 3, and guardrail transitions will be measured by the unit each, complete in place and accepted as shown on the plans.

415.5 PAYMENT:

Payment for accepted quantities of each type of guardrail will be made at the contract unit price. Payment shall be full compensation for furnishing materials and installing guardrails, complete in place including excavation, backfill, and disposal of surplus material.

Payment for Bolted Guardrail Anchors will be at the contract unit price, and shall be full compensation for the work, complete in place, including steel brackets, hardware, excavation, backfill, removing and replacing surfacing, cutting and fitting steel beam posts or timber posts, drilling anchor bolt holes in steel posts, timber posts, and box culverts, and disposal of surplus materials.

Payment for guardrail transitions will be at the contract unit price. Payment shall be full compensation for furnishing materials and installing guardrail transitions, complete in place including excavation, backfill, and disposal of surplus material.

- End of Section -

PART 500

STRUCTURES

Section	Last Revised	Title	Page
505	2013	Concrete Structures	505-1
506	2012	Precast Prestressed Concrete Members	506-1
510	1998	Concrete Block Masonry	510-1
511	1998	Brick Masonry	511-1
515	1998	Steel Structures	515-1
520	2012	Steel and Aluminum Handrails	520-1
525	1998	Pneumatically Placed Mortar	525-1
530	2000	Painting	530-1

This Page is Reserved for Future Use

Walkways shall be provided along each side and for the full length of bridge structures outside the deck area. These walkways shall be of sufficient width, and so constructed as to provide for the support of the bridges from which the longitudinal floats specified are to be operated. Inspection walkways and access thereto shall be provided under the deck forms between each pair of girders and outside of each outside girder for the full length of the bridge structure. The walkways shall be not more than 8 feet below the concrete to be inspected.

505.6.1 Construction Joints in Major Structures: The work shall be so prosecuted that construction joints will occur at designated places shown on plans unless specifically permitted otherwise by the Engineer. The Contractor shall complete, by continuous depositing of concrete, section for the work comprised between such joints. The joints shall be kept moist until adjacent concrete is placed.

All construction joints at the bottom of walls or arches, at the top of walls, and all longitudinal construction joints having a keyed, stepped or roughened surface shall be cleaned by sandblasting prior to placing the adjacent concrete. Any quality of sand may be used which will accomplish the desired results.

The sandblasting operations shall be continued until all unsatisfactory concrete, and all laitance, coatings, stains, debris, and other foreign materials are removed. The surface of the concrete shall be washed thoroughly to remove all loose material. The method used in disposing of waste water employed in washing the concrete surfaces shall be such that the waste water will not stain, discolor, or affect exposed surfaces of the structures. The method of disposal will be subject to the approval of the Engineer.

All horizontal construction joints or those on slight slopes, shall be covered with Class D mortar as specified in Section 776.

Expansion and contraction joints in the concrete structures shall be formed where shown on the plans and as directed. In general, such joints shall have smooth abutting surfaces, painted or separated and sealed as detailed on the plans. No reinforcement shall be extended through the joints, except where specifically noted or detailed on the plans. Concrete or mortar shall not be permitted to lap these joints in such a manner as to effect a tie or bond that would later promote spalling.

Asphalt paint or premolded asphalt filler used in joints shall be as specified in Section 729.

No direct payment will be made for furnishing and placing asphaltic paint, premolded asphaltic filler or other types of joint separators; their costs shall be included in the price bid for the item of work of which they are a part.

505.6.2 Adverse Weather Concreting:

(A) Hot Weather Concreting: Hot weather is defined as any combination of high ambient temperature, low relative humidity, and wind velocity which would tend to impair the quality of fresh concrete. These effects become more pronounced as wind velocity increases. Since last minute improvisations are rarely successful, preplanning and coordination of all phases of the work are required to minimize these adverse effects.

As an absolute minimum, the Contractor shall insure that the following measures are taken:

(1) An ample supply of water, hoses, and fog nozzles are available at the site. (2) Spare vibrators are on hand in the ratio of one spare vibrator for each three in use. (3) Preplanning has been accomplished to insure prompt placement, consolidation, finishing, and curing of the concrete. (4) Concrete temperature on arrival should be approximately 60°F. and in any event shall not exceed 90°F. The use of cold water and ice is recommended. (5) The subgrade is moist, but free of standing water. (6) Fog spray is utilized to cool the forms and steel. Under extreme conditions of high ambient temperature, exposure to the direct rays of the sun, low relative humidity, and wind, even strict adherence to these measures may not produce the quality desired and it may be necessary to restrict concrete placement to early morning only. If this decision is made, then particular attention must be directed to the curing process since the concrete will be exposed to severe thermal stresses due to temperature variation; heat of hydration plus midday sun radiation versus nighttime cooling.

(B) Cold Weather Concreting: Concrete shall not be placed on frozen ground, nor shall it be placed when the ambient temperature is below 40°F. unless adequate means are used to heat the aggregate and/or water and satisfactory means have been taken for protecting and heating the concrete during the curing period.

(C) Wet Weather Concreting: Placing of concrete shall be discontinued when the quantity of rainfall is such as to cause a flow or wash to the surface. Any concrete already placed and partially cured shall be covered to prevent dimpling. A construction joint will be installed prior to shut down.

(D) Replacement of Damaged or Defective Concrete: Upon written notice from the Engineer, all concrete which has been damaged or is defective, shall be replaced by the Contractor at no cost to the Contracting Agency.

(E) Recommended Reference:
(1) ACI-305 Hot Weather Concreting
(2) ACI-306 Cold Weather Concreting
(3) ACI-308 Recommended Practices for Curing Concrete

505.6.3 Bridge Deck Joint Assemblies:

505.6.3.1 Description: This work shall consist of furnishing and installing expansion devices including the seals, anchorage system, and hardware in accordance with the project plans and these specifications.

505.6.3.2 Materials: Elastomer Seals shall be of the Compression Seal or Strip Seal type, and shall conform to the requirements of the Arizona Department of Transportation Standard Specifications for Road and Bridge Construction Section 1011-5.

Steel shapes and plates shall conform to the requirements of ASTM A36, or ASTM A588.

505.6.3.3 Construction Requirements:

(1) General: Deck joint assemblies shall consist of elastomer and steel assemblies which are anchored to the concrete at the deck joint. The seal armor shall be cast in the concrete. The completed assembly shall be properly installed in the planned position, shall satisfactorily resist the intrusion of foreign material and water, and shall provide bump-free passage of traffic. For each size of seal on a project, one piece of the seal material supplied shall be at least 18 inches longer than required by the project Plans. The additional length will be removed in the presence of the Engineer and used for materials testing. Certificates of Compliance conforming to the requirements of Section 106.2 shall also be submitted by the Contractor.

(2) Shop Drawings**:** Prior to fabrication, the Contractor shall submit shop drawings to the Engineer for approval, in accordance with the requirements of Section 105.2. The shop drawings shall show complete details of the method of installation to be followed, including a temperature correction chart for adjusting the dimensions of the joint according to the ambient temperature, and any additions or rearrangements of the reinforcing steel from that shown on the project plans.

(3) Elastomer Seals: Seals shall conform to the requirements specified.

(4) Armor: All steel for cast-in-place deck joint assemblies shall conform to the requirements specified.

(5) Galvanizing**:** All steel parts of strip seal assemblies shall be galvanized after fabrication, in accordance with the requirements of ASTM A123 and A153, unless ASTM A588 steel is used. Bolts shall be high strength, conforming to the requirements of ASTM A325M, with a protective coating of zinc, followed by a chromate and baked organic coating conforming to the requirements of ASTM F1135, Grade 3, 5, 6, 7, or 8 and Color Code A.

Steel parts of compression seal assemblies do not require galvanizing, plating, or painting.

(6) Joint Preparation and Installation: At all joint locations, the Contractor shall cast the bridge decks and abutment backwalls with a formed blockout, sized to accommodate the pre-assembled joint assembly. The joint assembly will be anchored in the concrete to be placed with the secondary pour in the blockout. Prior to the secondary pour, the surface of the existing concrete in the blockout shall be coated with an approved adhesive specifically formulated for bonding new concrete to old concrete.

(7) Welding: All welding and inspection of welding for structural steel shall be performed in accordance with the requirements of the latest revision of the AASHTO/AWS D1.5M/D1.5 Bridge Welding Code. The use of electro-slag welding process on structural steel will not be permitted.

Installed armor assemblies shall be covered or otherwise protected at all times prior to installing the elastomer portion of the joint assembly. The elastomer shall be installed at such time and in such manner that it will not be damaged by construction operations.

Immediately prior to the installation of the seal element, the steel contact surfaces of the joint armor shall be clean, dry, and free of oil, rust, paint, or foreign material. Any perforation or tearing of the seal element due to installation procedures or construction activities will be cause for rejection of the installed seal element.

During the installation of all proprietary deck joint assemblies, the manufacturer's representative shall be present. As a minimum, the representative shall be present during the placement of the joint assembly in the deck blockout, prior to the secondary concrete pour, and shall also be present during the installation of the seal element.

505.6.4 Water Stops: Water stops of rubber or plastic, shall be placed in accordance with the details shown on the project plans. Where movement at the joint is provided for, the water stops shall be of the type permitting such movement without damage. Water stops shall be mechanically spliced, vulcanized, or heat-sealed to form continuous watertight joints, in accordance with the manufacturer's recommendations, and as approved by the Engineer.

505.6.5 Longitudinal Joints between Precast Bridge Deck Units: After erection of the units and at the time requested by the Engineer, the longitudinal shear key joints between units shall be thoroughly packed with a pre-packaged non-shrink grout or a sand-cement grout with an expansion agent approved by the Engineer. The Contractor shall then transversely connect the deck units with the connection rods, stressing and anchoring them as shown on the project plans.

505.7 CONCRETE DEPOSITED UNDER WATER:

When conditions render it impossible or inadvisable in the opinion of the Engineer to dewater excavation before placing concrete, the Contractor shall deposit under water, by means of a tremie or underwater bottom dump bucket, a layer of concrete of sufficient thickness to thoroughly seal the cofferdam. To prevent segregation the concrete shall be carefully placed in a compact mass and shall not be disturbed after being deposited. Water shall be maintained in a still condition at the point of deposit.

A tremie shall consist of a water tight tube having a diameter of not less than 10 inches with a hopper at the top. The tube shall be equipped with a device that will close the discharge end and prevent water from entering the tube while charging the tube with concrete. The tremie shall be supported so as to permit free movement of the discharge end over the entire top surface of the work and to permit rapid lowering, when necessary to retard or stop the flow of concrete. The discharge end shall be closed at the start of the work to prevent water entering the tube and shall be entirely sealed at all times, except when concrete is being placed. The tremie tube shall be kept full of concrete. When a batch is dumped into the hopper, the flow of concrete shall be induced by slightly raising the discharge end, always keeping it in the deposited concrete. The flow shall be continuous until the work is completed and the resulting concrete seal shall be monolithic and homogeneous.

The underwater bucket shall have an open top and the bottom doors shall open freely and outward when tripped. The bucket shall be completely filled and slowly lowered to avoid back wash and shall not be dumped until it rests on the surface upon which the concrete is to be deposited. After discharge, the bucket shall be raised slowly until well above the concrete.

Concrete deposited in water shall have 10 percent extra cement added.

505.8 CURING:

As soon after the completion of the specified finishing operations as the condition of the concrete will permit without danger of consequent damage thereto, all exposed surface shall either be sprinkled with water, covered with earth, sand or burlap; sprayed with a curing compound or sealed with a material conforming with Section 726. All concrete for bridge structures shall be water cured unless otherwise permitted by the Engineer. The Contractor shall use the wet burlap method for the water cure of all concrete in bridge decks and approach slabs, unless otherwise authorized by the Engineer.

Concrete that is water cured must be kept continuously wet for at least 10 days after being placed; preferably being covered, if possible, with at least 2 layers of not lighter than 7 ounce burlap, except that handrail, baserail, railing posts, tops of walls, and similar parts of the structure, if water cured, must be covered with burlap as above prescribed, immediately following the

finishing treatment specified therefore, and such covering shall not be removed in less than 4 days. Roadway areas, floors, slabs, curbs, walks, and the like, that are water cured may be covered with sand to a depth of at least 2 inches, in lieu of the burlap as specified above, as soon as the condition of the concrete will properly permit, and such covering must remain wet and in place until the concrete so covered is at least 10 days old unless otherwise directed by the Engineer or provided by special provisions.

When a sprayed impervious membrane is used, it shall be applied under pressure through a spray nozzle in such manner and quantity as to entirely cover and seal all exposed surfaces of the concrete with a uniform film. To insure complete coverage, membrane shall be applied in two applications for a total coverage of 150 square feet per gallon. The membrane, however, shall not be applied to any surface until all of the finishing operations have been completed; such surfaces being kept damp, until the membrane is applied. All surfaces on which a bond is required, such as construction joints, shear planes, reinforcing steel, and the like, shall be adequately covered and protected before starting the application of the sealing medium in order to prevent any of the membrane from being deposited thereon; and any such surface with which the seal may have come in contact shall immediately thereafter be cleaned. Care shall be exercised to avoid and prevent any damage to the membrane seal during the curing period. Should the seal be broken or damaged before the expiration of 10 days after the placing of the concrete, the break shall be immediately repaired by the application of additional impervious membrane over the damaged area.

Should any forms be removed sooner than 10 days after the placing of the concrete, the surface so exposed shall either be immediately sprayed with a coating of the membrane seal, or kept continuously wet by the use of burlap or other suitable means until such concrete has cured for at least 10 days.

When tops of walls are cured by the membrane sealing method the side forms, except metal forms, must be kept continuously wet for the 10 days following the placing of the concrete.

If due to weather conditions, materials used, or for any other reason, there is any likelihood of the fresh concrete checking or cracking prior to the commencement of the curing operations, it shall be kept damp, but not wet, by means of an indirect fine spray of water until all danger of such checking or cracking is past, or until the curing operations are started in the particular area affected.

Since hot weather leads to more rapid drying of concrete, protection and curing are far more critical than in cool weather. Water curing shall be used wherever it is practical and shall be continuous to avoid volume changes due to alternation of wetting and drying. The need for adequate continuous curing is greatest during the first few hours after placement of concrete in hot weather.

505.9 FINISHING CONCRETE:

Immediately after the removal of forms as provided above, all concrete surfaces shall be finished in accordance with the requirements specified below.

All surfaces scheduled to be covered with backfill shall be finished so as to be free of open and rough spaces.

All surfaces that will remain exposed in the completed work shall be finished so as to be free of open and rough spaces, depressions or projections. All angles and fillets shall be sharp and true and the finished surface shall present a pleasing appearance of uniform color.

All top surfaces of walls, abutments, piers, etc., shall be finished to a smooth surface and shall be cured by an approved method.

If rock pockets or honeycomb are of such an extent and character as to affect materially the strength of the structure and to endanger the steel reinforcement the Engineer may declare the concrete defective and require the removal and replacement of that portion of the structure affected by the Contractor at no additional cost to the Contracting Agency.

If finishing operations are not carried out as set forth below, all placing of concrete shall stop until satisfactory arrangements are made by the Contractor to promptly correct defective finishing work and to carry out finishing operations as specified.

One of the classes of finish as specified shall be applied to the various surfaces as set forth under applicability of finishes.

PART 600

WATER AND SEWER

Section	Last Revised	Title	Page
601	2012	Trench Excavation, Backfilling and Compaction	601-1
602	1998	Encasement of Water or Sewer Pipe by Jacking or Tunneling Operation	602-1
603	2012	Installation for High Density Polyethylene Pipe	603-1
604	2012	Placement of Controlled Low Strength Material	604-1
605	2012	Subdrainage	605-1
610	2013	Water Line Construction	610-1
611	2011	Disinfecting Water Mains	611-1
615	2007	Sewer Line Construction	615-1
616	2002	Reclaimed Water Line Construction	616-1
618	2011	Storm Drain Construction	618-1
620	2012	Cast-In-Place Concrete Pipe	620-1
621	1998	Corrugated Metal Pipe and Arches	621-1
625	2012	Manhole Construction and Drop Sewer Connections	625-1
630	2012	Tapping Sleeves, Valves and Valve Boxes on Water Lines	630-1
631	2012	Water Taps and Meter Service Connections	631-1

This Page is Reserved for Future Use

SECTION 610

WATER LINE CONSTRUCTION

610.1 DESCRIPTION:

The construction of all water lines shall conform to applicable standard specifications and details, except as otherwise required on the plans or as modified in the special provisions.

610.2 GENERAL:

All pipes shall be delivered, handled and installed in accordance with the manufacturer's recommendations and/or applicable provisions of AWWA standards for installation of the various types of water mains specified, insofar as such recommendations and provisions are not in variance with the standard specifications and details.

Where water lines are to be constructed in new subdivisions or in conjunction with street repaving projects, the streets shall be pre-graded to within 6 inches of the new street subgrade prior to trenching or cut stakes shall be set for trenching.

610.3 MATERIALS:

All pipes for water lines shall be of the classes shown on the plans or as specified below.

(A) The 4 inches through 16 inches diameter pipe may be asbestos-cement or ductile iron, except where a particular material is specified. All pipes shall be minimum 150 P.S.I. design unless otherwise specified.

(B) Pipe 16 inches and larger may be either ductile iron, or concrete pressure pipe-steel cylinder type.

Ductile iron water pipe and fittings - Section 750. Asbestos-cement water pipe and fittings - Section 752. Concrete pressure pipe-steel cylinder type - Section 758.

Service Material containing Brass or Bronze must comply with the current NSF 61-8 Standards at the time the Project begins.

All Brass or Bronze service material must meet the current AWWA C-800 Standards.

Any product used in water line construction containing brass or bronze that comes in contact with potable water shall meet the current NSF Standards and Federal Law.

610.4 CONSTRUCTION METHODS:

All water mains in major streets shall have a minimum cover of 48 inches over the top of the pipe. Water mains in other locations shall have a minimum cover over the top of the pipe as follows:

(A) 36 inches for mains smaller than 12 inches.

(B) 48 inches for mains 12 inches and larger.

Cover for water mains will be measured from existing or proposed finished grade of pavement or from natural ground, whichever is deeper.

No water main shall be deflected, either vertically or horizontally, in excess of that recommended by the manufacturer of the pipe or coupling, without the appropriate use of bends or offsets.

If adjustment of the position of a length of pipe is required after it has been laid, it shall be removed and rejoined as for a new pipe.

Every precaution shall be taken to prevent foreign material from entering the pipe. When on the project site, the ends of the pipe section shall be plugged, wrapped or tarped at all times when pipe laying is not in progress, which includes storage and staging at the site. The pipe shall be stored on a pallet, blocking or other means to prevent foreign materials from entering the

pipe. The pipe line shall be protected by a water-tight plug or other means approved by the Engineer when the pipe is in the trench if pipe laying is not in progress.

Where restrained joints are specified on mains sixteen (16) inches in diameter and smaller, ductile iron pipe shall be used with an approved joint restraint method.

On mains sixteen (16) inches in diameter and larger where plans specify welding joints and where ductile iron pipe is furnished, joints shall be restrained by an approved joint restraint method for the distance specified.

Except as otherwise required in this specification, the special provisions, or by the Engineer, trench excavation, backfilling and compaction shall be in accordance with the requirements of Section 601. Backfilling may be accomplished as soon as the pipe line has been installed to the satisfaction of the Engineer, subject to the requirements for testing, as contained below.

Hydrostatic testing shall be in accordance with this specification.

All corporation stops used for testing and chlorination shall be left in the pipe line with the stop closed and all connecting pipe removed.

Curb stops with flushing pipes or fire hydrants shall be installed at the ends of dead-end mains according to standard details. Thrust blocks shall be installed in accordance with this specification.

Valve boxes and covers shall be according to standard details.

Asbestos-cement pipe shall be installed in accordance with AWWA C-603, except pipe and fittings shall be in accordance with Section 752.

Cast iron pipe shall be installed in accordance with AWWA C-600, except pipe and fittings shall be in accordance with Section 750.

Ductile iron pipe shall be installed in accordance with this specification and pipe and fittings shall be in accordance with Section 750.

610.5 SEPARATION:

610.5.1 General: Water lines and sewer lines shall be separated to protect water lines from contamination by sewer lines.

The angle of a water line and sewer line crossing shall be limited to between (45) forty-five degrees and (90) ninety degrees. Intersection angles of less than (45) forty-five degrees shall not be allowed.

Separation distances are measured from the outside diameter of the water or sewer line, or the centerline of a manhole.

When water and sewer lines cannot meet separation requirements, extra protection is required as described in Subsection 610.5.5 and shown in Standard Details 404-1, 404-2 and 404-3.

Extra protection requirements for line crossings are measured from the closest outside surfaces of the sewer and water line.

Water line service connections to individual building supply and distribution plumbing shall not be placed below sewer lines, and shall otherwise comply with the separation requirements of the applicable plumbing code as applied by the Agency (Administrative Authority). Methods described for extra protection do not apply to these service lines.

Water and sewer lines shall not be constructed parallel within a common trench.

610.5.2 Water Line Separation from Gravity Sewer Lines: Water lines shall not be placed within two (2) feet horizontal and one (1) foot vertical above and two (2) feet vertical below gravity sewer lines.

610.13 COUPLINGS, JOINTS, GASKETS AND FLANGES:

(A) Couplings: The couplings used to join the pipe to flanged valve adapters shall be Dresser Style 38, Smith-Blair 411 or an approved equal.

(B) Joints: The joints and fitting shall conform to Sections 750 and 752.

(C) Bolts and Nuts:

(1) Bolts, studs, and nuts used in underground field flanged connections or for connecting fittings shall be carbon steel compliant with ASTM A307, Grade A unless Grade B is specified. Bolts, studs, and nuts shall be in accordance with AWWA C111. Bolts and studs shall have Class 2A thread tolerance with the corresponding nuts having Class 2B tolerance. Bolts, studs and nuts shall have a hot-dipped zinc coating in accordance with ASTM F2329. All bolt diameters shall normally be 1/8 inch smaller than the bolt hole diameter. If specified, allowable exceptions to zinc coating shall be bolts, studs, and nuts made from 316 stainless steel per ASTM F593 or cadmium plated per ASTM B766. All bolts shall be hexagonal heads.

(2) The minimum requirement for underground mechanical joint connections using T-head bolts shall meet the requirements of AWWA C111 using a high strength low alloy steel manufactured for atmospheric corrosion resistance per ASTM A242.

These bolted joints shall be protected as follows: Following installation and before backfilling, all couplings, steel flanges, bolts, nuts, anchor bolts and rods, bolting of all flanged valves, and all exposed steel shall be protected from corrosion by either of the two methods outlined below at the Contractor's option.

(A) Below ground installations shall be coated with NO-OX-ID “A” with a film of not less than 1/32 inch thick and then coated with cement mortar not less than 1 inch thickness before backfilling. Cement mortar shall be composed of 1 part cement, ASTM C150, Type II, low alkali, to 3 parts sand. Before application of the cement mortar coating the area to be protected shall be covered with a layer of 2 x 2 inch No. 14 gage welded wire fabric, firmly wired in place.

(B) Below ground installations shall be protected by the application of hot coal-tar enamel. The coal-tar enamel shall be in accordance with AWWA C-203 and shall be applied to the top part of the pipe or fittings by daubers for at least 2 coats for a total minimum thickness of 1/16 inch. The coal-tar for under side of the pipe flanges or fittings shall be applied by the pan or cocoon method as described below and in AWWA Manual M-11, Steel Pipe.

Pan Method: The coating pan is securely anchored in place on the underside of the pipe and straddling the connection to be coated. The pan shall be wide enough so that the entire connection will be coated.

Hot coal-tar enamel is poured into the pan, from one side only, until the pan is completely filled. The drain plug or valve, is then opened and the excess coal-tar drained out. The pan can then be removed. Details of the coating pan and corresponding dimensions are given in AWWA Manual M-11.

The upper portion of the connection, and all remaining exposed steel pipe, will then be coated by the use of a dauber. The coal-tar coating shall be applied in at least 2 coats for a minimum thickness of 1/16 inch. The daubers and method of application conform to AWWA C-203. No thinning will be allowed.

(C) Cocoon Method: The cocoon is formed by placing glass fiber cloth or roofing paper, of the proper width, around the underside of the connection and adjacent exposed steel pipe. The edges of the cocoon shall be securely fastened to the pipe. Backfill is lightly placed to the spring line, and the top of the cocoon is opened and layed back on the filled area and hot coal-tar enamel poured, from one side only, until the cocoon is completely filled. The loose backfill prevents rupture of the cocoon. The upper portion of the connection and remaining exposed steel pipe shall be coated as above.

(D) Gaskets: Except as otherwise provided, all gaskets for pipe lines shall be one piece full faced gaskets from one-ply cloth inserted SBR rubber material. Gaskets for flanges 20 inches and smaller shall be from 1/16 inch thick material. Gaskets for flanges 24 inches and larger shall be from 1/8 inch thick material. Gasket material shall be J-M 109 as manufactured by Johns-Manville Corporation or an approved equal. Physical characteristics of the rubber compound shall meet ASTM D2000, Class 4AA805A13.

(E) Flanges: Cast iron flanges shall conform to AWWA C-110 as to material, diameter, thickness, drilling, etc. Steel flanges shall be ring or hub type, and shall conform to AWWA C-207, Class D. All flanges shall be drilled and have flange diameters and bolt circles conforming to AWWA C-110, except bolt holes will be 1/8 inch larger than the bolts given for the various sizes. All bolts shall be as specified above and all flanges shall have a flat facing.

610.14 BLOCKING:

All pipe lines, valves and fittings 16 inches and smaller in diameter shall be blocked with concrete thrust blocks in accordance with standard details. Thrust block areas for pipe, valves and fittings larger than 16 inches in diameter shall be calculated for each size pipe, valve and fitting to be installed and shown on the plans.

Thrust block areas shall be calculated on the basis of 200 psi test pressure bearing against undisturbed 3,000 psf soil.

If soil or pressure conditions other than those stated above are encountered, the thrust block areas shall be calculated and submitted for approval. The areas stipulated in the standard details are minimum and shall not be decreased.

When restrained/welded joints are specified to resist thrust forces, blocking is not required.

With the Engineers approval, restrained/welded joints may be used in lieu of thrust blocks to resist thrust forces.

610.15 TESTING:

Water lines, including all fittings and connections to the water mains shall be tested for watertightness by subjecting each section to hydrostatic tests in accordance with applicable provisions or AWWA C-600, except as modified below, and shall consist of pressure test and leakage tests. The Contractor shall provide all vents, piping, plugs, bulkheads, valves, bracing, blocking, pump, including measuring device and all other equipment necessary for making the tests, except pressure gages, and shall pay the Contracting Agency for water used in the tests.

(A) Pressure Tests: Water lines, including all fittings and connections to the water mains shall be tested for watertightness by subjecting each section to pressure test, measured at the lowest end of the section under test. The test pressure shall be at least 200 psi for lines smaller than 16 inches and 150 psi for lines 16 inches or larger unless otherwise noted. The duration of each pressure test shall be at least 2 hours. Each section of a new line between sectionalizing valves or between the last sectionalizing valve and the end of the project shall be tested separately as required in AWWA C-600, and/or as modified in these specifications, except that any such section less than 500 feet in length may be tested with the adjacent section, if both sections of line have the same pipe class rating. No section greater than ½ mile in total pipe length shall be tested without special written permission of the Engineer.

The test may be made before or after backfilling. However, if mechanical compaction is to be used in the backfilling operations as spelled out in AWWA C-600, the test shall not be made until the backfilling is completed and compacted. All connections, blowoffs, hydrants and valves shall be tested with the main as far as is practicable.

The test section shall be slowly filled with potable water and all air shall be vented from the line. The rate of filling shall be as determined by the Superintendent of Water Distribution, with at least 24 hour notice required before tests are scheduled. While the test section is under test pressure, a visual inspection for leaks may be made along the pipe line, and all visible leaks repaired. The pressure test shall not begin until the pipe has been filled with water for at least 24 hours to allow for absorption.

(B) Leakage Tests: Leakage tests shall be made after pressure test has been satisfactorily completed and all backfilling and compaction is completed to top of trench. The Contractor shall furnish the necessary apparatus and assistance to conduct the test.

The duration of each leakage test shall be at least 2 hours. To pass the leakage test, the leakage from the pipe line shall not exceed the leakage allowed by the following formula:

$$L = \frac{ND\sqrt{P}}{4500}$$

in which

PART 700

MATERIALS

Section	Last Revised	Title	Page
701	2013	Aggregate	701-1
702	2013	Base Materials	702-1
703	2012	Riprap	703-1
705	2012	Portland Cement Treated Base	705-1
708	2011	Asphalt Pavement Core Bonding Materials	708-1
710	2013	Asphalt Concrete	710-1
711	2013	Paving Asphalt	711-1
712	1999	Liquid Asphalt	712-1
713	2012	Emulsified Asphalts Materials	713-1
714	2012	Microsurfacing Materials	714-1
715	2012	Slurry Seal Materials	715-1
716	2012	Cover Material	716-1
717	2012	Asphalt-Rubber Asphalt Concrete	717-1
718	2012	Preservative Seal for Asphalt Concrete	718-1
725	2013	Portland Cement Concrete	725-1
726	1998	Concrete Curing Materials	726-1
727	2008	Steel Reinforcement	727-1
728	2013	Controlled Low Strength Material	728-1
729	1998	Expansion Joint Filler	729-1
735	2008	Reinforced Concrete Pipe	735-1
736	2012	Non-reinforced Concrete Pipe	736-1
737	1998	Asbestos-cement Pipe and Fittings for Storm Drain and Sanitary Sewer	737-1
738	2012	High Density Polyethylene Pipe & Fittings for Storm Drain & Sanitary Sewer	738-1
741	2011	Lining for Reinforced Concrete Sanitary Sewer Pipe	741-1
743	1998	Vitrified Clay Pipe	743-1
744	1998	ABS Truss Pipe and Fittings	744-1
745	1998	PVC Sewer Pipe and Fittings	745-1
750	2005	Iron Water Pipe and Fittings	750-1
752	1998	Asbestos-cement Water Pipe and Fittings	752-1
753	2000	Galvanized Pipe and Fittings	753-1
754	2012	Copper Pipe, Tubing and Fittings	754-1

Section	Last Revised	Title	Page
755	2012	Polyethylene Pipe for Water Distribution	755-1
756	2008	Dry Barrel/Fire Hydrants	756-1
757	1998	Sprinkler Irrigation System	757-1
758	2005	Concrete Pressure Pipe - Steel Cylinder Type	758-1
759	2002	Steel Pipe	759-1
760	1998	Coating Corrugated Metal Pipe and Arches	760-1
761	1998	Structural Plate Pipe, Arches, and Pipe Arches	761-1
770	2013	Structural and Rivet Steel, Rivets, Bolts, Pins, and Anchor Bolts	770-1
771	2005	Galvanizing	771-1
772	2012	Chain Link Fence	772-1
775	1999	Brick and Concrete Masonry Units (Blocks)	775-1
776	2012	Masonry Mortar and Grout	776-1
778	1998	Lumber	778-1
779	1998	Wood Preservatives	779-1
787	1999	Gray Iron Castings	787-1
790	1999	Paint	790-1
792	2010	Dust Palliative	792-1
795	1998	Landscape Material	795-1
796	2010	Geosynthetics	796-1

SECTION 701

AGGREGATE

701.1 GENERAL:

Coarse and fine aggregates are defined in accordance with ASTM D2487. Material property requirements for specific uses are provided in applicable MAG sections.

Apparent specific gravity shall be at least 2.50, when tested in accordance with ASTM C-127.

701.2 COARSE AGGREGATE:

Rock and gravel shall be clean, hard, sound, durable, uniform in quality, and free of any detrimental quantity of soft, friable, thin elongated, or laminated pieces, disintegrated material, organic matter, oil, alkali, or other deleterious substance. Aggregate sources shall include, but not be limited to alluvial deposits, terrace aggregates, quarry stone, or other suitable sources including recycled products that meet all material test requirements as approved by the Engineer. Aggregate classification shall be made by size as noted herein.

701.2.1 Boulders: Particles of rock that will not pass a 12-inch square opening.

701.2.2 Cobbles: Particles of rock that will pass a 12-inch square opening, but are retained on a 3-inch square opening.

701.2.3 Coarse Gravel: Particles of rock that will pass a 3-inch U.S. standard sieve, but are retained on a 3/4-inch U.S. standard sieve.

701.2.4 Fine Gravel: Particles of rock that will pass a 3/4-inch U.S. standard sieve, but are retained on a No. 4 U.S. standard sieve

701.3 FINE AGGREGATE (SAND):

Fine aggregate (sand) shall be fine granular material produced by the crushing of rock or gravel or naturally produced by disintegration of rock and shall be sufficiently free of organic material, mica, loam, clay, and other deleterious substances to be thoroughly suitable for the purpose for which it is intended. Fine aggregates particles shall pass a No. 4 U.S. standard sieve, but are retained on a No. 200 U.S. standard sieve.

701.4 RECLAIMED CONCRETE MATERIAL (RCM)

Reclaimed concrete material (RCM) is defined as an aggregate material that is derived from the crushing, processing and classification of Portland cement concrete construction materials recovered, salvaged, or recycled from roadways, sidewalks, buildings, bridges, and other sources.

In accordance with Section 7 of AASHTO M319, RCM shall not contain more than five percent by mass of brick or concrete block and shall be substantially free of wood, metal, plaster, and gypsum board, RCM shall be free of all materials that fall under the category of solid waste or hazardous materials as defined by the state or local jurisdiction. With the approval of the Engineer, these respective quantities may be adjusted if the performance of the RCM is not adversely impacted. RCM may be used alone or uniformly blended with other approved aggregate materials to obtain the applicable performance criteria. RCM shall not be used in Portland Cement Concrete without the prior approval of the Engineer.

701.5 RECLAIMED ASPHALT PAVEMENT (RAP):

Reclaimed asphalt pavement (RAP) is defined as all recovered, salvaged or recycled asphalt road waste, large particles or milled material that has been size-reduced, crushed and or screened appropriately, making it reusable. This material shall be of a consistent and relatively clean manner as to not adversely affect the final material usage. RAP may be used alone or uniformly blended with other approved aggregate materials to obtain the applicable performance criteria. RAP shall not be used in Portland Cement Concrete without the prior approval of the Engineer.

701.6 SAMPLING:

Sampling of aggregates shall be performed in accordance with ASTM D-75.

- End of Section -

SECTION 702

BASE MATERIALS

702.1 GENERAL:

Base materials shall be as defined in Section 701, consisting of appropriately sized coarse and fine aggregates, Reclaimed Concrete Material (RCM) or Reclaimed Asphalt Pavement (RAP), other inert materials, and/or aggregates that have been treated for plasticity index mitigation, as approved by the Engineer. These materials, whether virgin or reclaimed or a uniform blend of both, shall conform to the end result quality requirements of this section.

When base material without further qualification is specified, the Contractor shall supply materials that meet the gradation and other quality requirements for Aggregate Base Course as defined in Table 702-1. When a particular classification of base material is specified, the Contractor may substitute materials meeting the gradation and other quality requirements for Aggregate Base Course for Select material, when approved by the Engineer.

The Contractor shall provide the Engineer laboratory testing documentation on the source of the base material showing compliance to Table 702-1 at least 10 business days prior to placement except where the base materials are being obtained from a currently approved source from a list maintained by the appropriate Agency or as determined by the Engineer. Included in the documentation shall be the percentage of RCM or RAP, if applicable.

RCM meeting the requirements of Section 701.4 can be utilized in base material at a maximum quantity of 50% and may be used in roadway applications or where otherwise specified by project plans or special provisions.

RAP meeting the requirements of Section 701.5 can be utilized in base material up to 100% and may be used in roadway applications or where otherwise specified by Project plans or special provisions.

702.1.1 Aggregate Base Course is primarily used in roadway applications or where otherwise specified by project plans or special provisions.

702.1.2 Select Material is primarily used, as a sub base in roadways, fill and embankment applications or where otherwise specified by project special provisions.

702.2 PHYSICAL PROPERTIES:

702.2.1 Base material shall meet the physical properties listed in Table 702-1.

Table 702-1			
Sieve Analysis Test Methods AASHTO T-27, T-11			
Sieve Size	Accumulative Percentage Passing Sieve, by Weight		
	Select Material		Aggregate Base Course
	Type A	Type B	
3 in.	100	- -	- -
1-1/2 in.	- -	100	100
1 in.	- -	- -	90 – 100
No. 4	30 - 75	30 - 70	38 - 65
No. 8	20 - 60	20 - 60	25 – 60
No. 30	10 - 40	10 - 40	10 – 40
No. 200	0 - 12	0 - 12	3 – 12
Plasticity Index Test Methods AASHTO T-89 Method A, T-90, T146 Method A			
Maximum allowable value	5	5	5
Fractured Face, One Face Test Method ARIZ 212, Percent by Weight of the Material Retained on a #4 Sieve			
Minimum required value	50	50	50
Resistance to Degradation and Abrasion by the Los Angeles Abrasion Machine Test Method AASHTO T-96, Percent Loss by Weight			
Maximum allowable value at 100 revolutions	10	10	10
Maximum allowable value at 500 revolutions	40	40	40

702.2.2: When tested for acceptance, Base material that does not meet Table 702-1 properties for gradation or PI may be approved at the Engineer's discretion if the R-Value is at least 70, when determined by test method AASHTO T-190 (see Table 310-1).

- End of Section -

SECTION 703

RIPRAP

703.1 GENERAL:

Aggregate for grouted and ungrouted riprap shall meet the requirements of Sections 701.2 and 703.2 unless otherwise stated in the project specifications.

Aggregate shall be color-matched with adjacent landscape aggregate if specified on the plans or in the special provisions.

The Contractor shall provide the Engineer, in writing, material information and the source location at least 10 days prior to use of the material unless the material is currently acceptable for use as determined by the Engineer.

703.2 PHYSICAL PROPERTIES:

Riprap shall have the following physical properties:

(A) The maximum aggregate size shall be 150% of the indicated D_{50} size and the minimum aggregate size shall be 50% of the indicated D_{50} size.

(B) Aggregate shall be angular and shall not exceed 3:1 ratio for flat and/or elongated pieces when determined by ASTM D4791. Rounded aggregate shall only be allowed when specified or approved by the Engineer.

(C) The loss by abrasion in the Los Angeles Abrasion Machine, determined as prescribed in ASTM C535, shall not exceed 40 percent (by weight) after 1000 revolutions.

- End of Section -

SECTION 705

PORTLAND CEMENT TREATED BASE:

705.1 GENERAL:

The cement treated base shall consist of aggregate, cement, and water. Use of other types of materials must be approved by the Engineer. The compressive strength requirement shall be determined by the project specifications. The amount of cement used in the mix design shall be determined by the project specifications.

705.2 AGGREGATE FOR CEMENT TREATED BASE:

The aggregate for cement treated base shall conform to the requirements of Section 702.2 Aggregate Base Course.

705.3 PORTLAND CEMENT AND WATER:

Portland cement and water shall conform to the requirements of Section 725.

705.4 CEMENT TREATED BASE MIX DESIGN:

A cement-treated base mix design incorporating the proposed materials shall be completed prior to the start of work. The mix design shall be performed in accordance with Arizona Department of Transportation test methods ARIZ-220, ARIZ-221, and ARIZ-222. Compressive strength specimens shall be tested in accordance with ARIZ-241.

The final report shall include the following elements:

(1) The source and supplier of the aggregate including gradation and plasticity index testing.
(2) The source, supplier, and type of cement.
(3) The cement content required to meet the project specifications. Cement content shall be calculated by the dry weight of the combined aggregate-cement mixture.
(4) The optimum moisture and maximum dry density of the proposed blend at the target cement content as determined by ARIZ-221.
(5) The rock corrected optimum moisture and maximum dry density of the proposed blend at the target cement content as determined by ARIZ-222.
(6) A summary of design compressive strength testing including a graph plotting cement content as the x-axis and compressive strength as the y-axis.

- End of Section -

SECTION 708

ASPHALT PAVEMENT CORE BONDING MATERIALS

708.1 GENERAL:

This specification covers the materials required to bond asphalt pavement cores to the asphalt concrete pavement from which it was originally removed.

708.2 MATERIALS:

Bonding material shall be a single component cementitious, rapid hardening, high strength, waterproof bonding agent conforming to the physical properties shown in Table 708-1.

TABLE 708-1		
Bond Material Properties		
Property	**ASTM Test Method**	**Requirements**
Bond Strength, psi	C882	20 min.
Compressive Strength, psi, (70 degrees F., 30 minute cure)	C109	200 min.

Bonding material shall be impervious to water penetration at the joint after curing.

Bonding material shall, within 30 minutes at minimum ambient temperature of 70 degrees F., allow an 18" diameter core to support a traffic load equivalent to at least three (3) times the AASHTO H-25 standard wheel load.

The bonding material is required to securely bond the asphalt concrete core to asphalt concrete pavement and to fill all voids between the core and pavement and within the core.

708.3 TEST REPORT:

Specifications and test results for the bonding material shall be submitted to the Agency for review and approval before use.

- End of Section -

(Note: Section 709 has been deleted)

SECTION 710

ASPHALT CONCRETE

710.1 GENERAL:

Asphalt concrete shall be a mixture of asphalt cement and mineral aggregates. Mineral admixture shall be included in the mixture when required by the mix design or by the Engineer. Asphalt concrete shall be produced in accordance with Section 321.

The designation for asphalt concrete mixes shall be based on the nominal maximum aggregate size of the mix. The applicable mix designations are 3/8 inch, 1/2 inch, 3/4 inch and Base (1") mix.

Each mix shall be designed using Marshall or Gyratory compaction methods. Either Gyratory or Marshall Mixes may be used for low or high traffic conditions, as determined by the agency. Low traffic conditions are conditions where the asphalt mix will be subject to low volume and low weight vehicle usage. Examples of this condition are residential streets, most parking lots and residential minor collector streets. High traffic conditions are conditions where the asphalt mix will be subject to high volume and/or heavy weight vehicle usage as found on major collector, arterial and commercial streets. Street classifications (i.e. minor collector and major collector) shall be determined by the specifying agency.

The following table (Table 710-1) displays the recommended lift thickness for various asphalt concrete mix designations found within Section 710. Please note that these recommended lift thicknesses are minimums based on each mix designation's "Nominal Aggregate Size" and the relative coarseness of its gradation. The compacted thickness of layers placed shall not exceed 150% of the Minimum Lift Thickness of Table 710-1 except as otherwise provided in the plans and specifications, or if approved in writing by the Engineer.

TABLE 710-1		
RECOMMENDED MINIMUM LIFT THICKNESS FOR ASPHALT CONCRETE MIXES		
Asphalt Concrete Mix Designation (inches)	Minimum Lift Thickness Marshall Mixes	Minimum Lift Thickness Gyratory Mixes
3/8"	1.0 inches	1.5 inches
1/2"	1.5 inches	2.0 inches
3/4"	2.5 inches	3.0 inches
Base	3.0 inches	n/a

710.2 MATERIAL:

710.2.1 Asphalt Binder: The asphalt binder specified in this section has been developed for use in desert climate conditions. When used in other climates, consideration should be given to adjustments in the asphalt binder selection. The asphalt binder shall be Performance Grade Asphalt conforming to the requirements of Section 711 for PG 70-10, unless otherwise approved by the Engineer or specified differently in the plans or special provisions.

710.2.2 Aggregate: Coarse and Fine aggregates shall conform to the applicable requirements of this section. Coarse mineral aggregate shall consist of crushed gravel, crushed rock, or other approved inert material with similar characteristics, or a combination thereof, conforming to the requirements of these specifications.

Coarse aggregate for hot mix asphalt is material retained on or above the No. 4 sieve and Fine aggregate is material passing the No. 4 sieve. Aggregates shall be relatively free of deleterious materials, clay balls, and adhering films or other material that prevent coating with the asphalt binder. Coarse and Fine aggregates shall conform to the following requirements when tested in accordance with the applicable test methods.

TABLE 710-2			
COARSE/FINE AGGREGATE REQUIREMENTS			
Characteristics	Test Method	Low Traffic	High Traffic
Fractured Faces, % (Coarse Aggregate Only)	Arizona 212	75, 1 or more	85, 1 or more 80, 2 or more
Uncompacted Voids, % Min.	AASHTO T-304, Method A	42	45
Flat & Elongated Pieces, % 5:1 Ratio	ASTM D4791	10.0 Max.	10.0 Max.
Sand Equivalent, %	AASHTO T-176	50 Min.	50 Min.
Plasticity Index	AASHTO T-90	Non-plastic	Non-plastic
L.A. Abrasion, %Loss	AASHTO T-96	9 max. @ 100 Rev. 40 max. @ 500 Rev.	9 max. @ 100 Rev. 40 max. @ 500 Rev.
Combined Bulk Specific Gravity	AI MS-2/SP-2	2.35 – 2.85	2.35 – 2.85
Combined Water Absorption	AI MS-2/SP-2	0 – 2.5%	0 – 2.5%

Tests on aggregates used in asphalt concrete outlined above, shall be performed on materials furnished for mix design purposes and composited to the mix design gradation.

Blend sand (naturally occurring or crushed fines) shall be clean, hard and sound material which will readily accept asphalt binder coating. The blend sand grading shall be such that, when it is mixed with the other mineral aggregates, the combined product shall meet the requirements of Table 710-2.

The natural sand shall not exceed 20 percent for the Marshall mixes and 15 percent for the Gyratory mixes by weight of the total aggregate for a mix.

710.2.3 Reclaimed Asphalt Pavement (RAP): When allowed by the Engineer, Reclaimed Asphalt Pavement (RAP), as defined in Section 701.5, may be used in asphalt concrete provided all requirements of Section 710 are met. References to use of RAP in Section 710 apply only if RAP is used as part of the mixture.

When RAP is used in asphalt concrete, it shall be of a consistent gradation, asphalt content, and properties. When RAP is fed into the plant, the maximum RAP particle size shall not exceed 1 1/2 in. The percentage of asphalt in the RAP shall be established in the mix design. The percentage of RAP binder shall be established in the mix design.

When RAP is used in base and intermediate courses, the amount of RAP aggregate and RAP binder should not exceed 30% contribution; Surface courses should be limited to 20% RAP aggregate and RAP binder contribution.

In addition to the requirements of Section 710.3.1, the job mix formula shall indicate the percent of asphalt RAP and the percent and performance grade of virgin (added) asphalt binder.

When less than or equal to 15% RAP binder is used by weight of total binder in the mix, the added virgin binder shall meet the requirements for PG 70-10 as shown in Section 711. When greater than 15% RAP is used by weight of the total binder in the mix, the added virgin binder will be dropped one grade for low and high temperature properties to a PG 64-16, unless testing indicates that the blend of the recovered RAP binder and virgin binder meets the requirements for PG 70-10 as shown in Section 711. The virgin asphalt binder shall not be more than one standard asphalt material grades different than the specified mix design binder grade.

710.2.4 Mineral Admixture: Mineral admixture when used as an anti-stripping agent in asphalt concrete shall conform to the requirements of AASHTO M-17. Mineral admixture used in asphalt concrete shall be dry hydrated lime, conforming to the requirements of ASTM C1097 or Portland cement conforming to ASTM C150 Type II or ASTM C595 Type IP. The amount of hydrated lime or Portland cement used shall be determined by the mix design. The minimum Mineral admixture content within a mix will be 1.00 percent, by weight of total aggregate.

710.3 MIX DESIGN REQUIREMENTS:

710.3.1 General: The mix design for asphalt concrete shall be prepared by a laboratory that is accredited through the AASHTO Accreditation Program (AAP) in Hot Mix Asphalt Aggregates and Hot Mix Asphalt. The laboratory shall be under the direct supervision of a Civil Engineer, registered by the State of Arizona, and who is listed by ADOT as a "Qualified Asphaltic Concrete Mix Design Engineer" within ADOT's latest list of approved laboratories. The latest list of approved laboratories is available on ADOT's web page www.azdot.gov. The date of the design shall not be older than one year from the date of submittal, unless supportive documentation is provided and approved by the Engineer.

The mix design report shall include the following elements as a minimum.

(1) The name and address of the testing organization and the person responsible for the mix design report.

(2) The mix plant identification and/or location, as well as the supplier or producer name.

(3) A description of all products that are incorporated in the asphalt concrete along with the sources of all products, including admixtures and asphalt binder, and their method of introduction.

(4) The supplier and grade of asphalt binder, the source and type of mineral aggregate, and the percentage of asphalt binder and mineral admixture used.

(5) The percentage of RAP and RAP Binder being contributed to the total mix shall be included in the mix design report.

(6) The mix design report whether Gyratory or Marshall shall state the traffic condition (low or high traffic) and size designation.

(7) The results of all testing, determinations, etc., such as: specific gravity and gradation of each component, water absorption, sand equivalent, loss on abrasion, fractured coarse aggregate particles, Tensile Strength Ratio (ASTM D 4867), Marshall stability and flow, asphalt absorption, percent air voids, voids in mineral aggregate, and bulk density. Historical abrasion values may be supplied on existing sources. The submittal should include a plot of the gradation on the Federal Highway Administration's 0.45 Power Gradation Chart, plots of the compaction curves and the results of moisture sensitivity testing.

(8) The laboratory mixing and compaction temperature ranges for the supplier and grade of asphalt binder used within the mix design.

(9) A specific recommendation for design asphalt binder content and any limiting conditions that may be associated with the use of the design, such as minimum percentages of crushed or washed fine aggregate.

(10) The supplier's product code, the laboratory Engineer's seal (signed and dated), and the date the design was performed.

The mix design shall be submitted to the Agency or Engineer by the Contractor/Supplier for which it was developed as part of his project submittals. Once the mix design has been approved by the agency or Engineer, the Contractor and/or his supplier shall not change plants nor use additional mixing plants without prior approval of the Engineer. Any changes in the plant operation, the producer's pit, the asphalt binder, including modifiers in the asphalt binder, or any other item that will cause an adjustment in the mix, shall be justification for a new mix design to be submitted.

710.3.2 Mix Design Criteria: The mix design shall be performed by one of two methods, Marshall Mix Design or Gyratory Mix Design. The method shall be specified on the plans, special provisions, or by the Engineer. A minimum of 4 points will be used to establish the mix design results. The oven aging period for both Marshall and Gyratory mix design samples shall be 2 hours.

710.3.2.1 Marshall Mix Design: The Marshall Mix Design shall be performed in accordance with the requirements of the latest edition of the Asphalt Institute's Manual, MS-2 "Mix Design Methods for Asphalt Concrete." The mix shall use the compactive effort of 75 blows per side of specimen. The mix shall comply with the criteria in Table 710-3.

TABLE 710-3					
MARSHALL MIX DESIGN CRITERIA					
Criteria	Requirements				Designated Test Method
	3/8" Mix	1/2" Mix	3/4" Mix	Base Mix	
1. Voids in Mineral Aggregate: %, min	15.0	14.0	13.0	12.0	AI MS-2
2. Effective Voids: %, Range	4.0±0.2	4.0 ±0.2	4.0 ±0.2	4.0 ±0.2	AI MS-2
3. Absorbed asphalt: %, Range*	0-1.0	0-1.0	0-1.0	0-1.0	AI MS-2
4. Dust to Eff. Asphalt Ratio, Range **	0.6-1.4	0.6-1.4	0.6-1.4	0.6-1.4	AI MS-2
5. Tensile Strength Ratio: % Min.	65	65	65	65	ASTM D 4867
6. Dry Tensile Strength: psi, Min.	100	100	100	100	ASTM D 4867
7. Stability: pounds, Minimum	2,000	2,500	2,500	3,000	AASHTO T-245
8. Flow: 0.01-inch, Range	8-16	8-16	8-16	8-16	AASHTO T-245
9. Mineral Aggregate Grading Limits					AASHTO T-27
	Percent Passing with Admix				
Sieve Size	3/8 inch Mix		1/2 inch Mix	3/4 inch Mix	Base Mix
1-1/4 inch					100
1 inch				100	90-100
3/4 inch			100	90 – 100	85-95
1/2 inch	100		85 – 100	---	---
3/8 inch	90-100		62 – 85	62 – 77	57-72
No. 8	45-60		40 – 50	35 – 47	33-43
No. 40	10-22		10 – 20	10 – 20	9-18
No. 200	2.0 – 10.0		2.0 – 10.0	2.0 – 8.0	1.0 – 7.0

* Unless otherwise approved by the Engineer.

** The ratio of the mix design composite gradation target for the No. 200 sieve, including admixture, to the effective asphalt content shall be within the indicated range.

710.3.2.2 Gyratory Mix Design: Gyratory Mix Designs shall be performed in accordance with the requirements of latest edition of the Asphalt Institute's SP-2 manual. Mix design laboratory compacted specimens shall be prepared using a gyratory compactor in accordance with AASHTO T-312.

The mix design shall be formulated in a manner described for volumetric mix designs in the current edition of the Asphalt Institute Manual SP-2, except the number of trial blend gradations necessary will be determined by the mix design laboratory. Duplicate gyratory samples shall be prepared at a minimum of four (4) binder contents to select the recommended binder content. The gyratory specimens shall be compacted to 160 gyrations. Volumetric data for the design number of gyrations, N_{des}, and the initial number of gyrations, N_{ini}, are then back calculated based on the bulk specific gravity, G_{mb}, of the N_{max} specimens and the height data generated during the compaction process of those same specimens.

For Low traffic designs, volumetric data for 115 gyrations, N_{max} for Low Traffic designs, is also back calculated from the specimens compacted to 160 gyrations.

The corrected density of the specimens shall be less than 89.0 percent of maximum theoretical density at N_{ini}. The corrected density of the specimens shall be less than 98.0 percent of maximum theoretical density at N_{max}. The Gyratory mix shall comply with the criteria in Table 710-4.

TABLE 710-4				
GYRATORY MIX DESIGN CRITERIA				
Criteria	**Requirements**			**Designated Test**
	3/8" Mix	**1/2" Mix**	**3/4" Mix**	**Method**
1. Voids in Mineral Aggregate: %, Min.	15.0	14.0	13.0	AI SP-2
2. Effective Voids: %, Range	4.0 ± 0.2	4.0 ± 0.2	4.0 ± 0.2	AI SP-2
3. Absorbed Asphalt: %, Range *	0 - 1.0	0 - 1.0	0 - 1.0	AI SP-2
4. Dust to Eff. Asphalt Ratio, Range **	0.6 – 1.4	0.6 – 1.4	0.6 – 1.4	AI SP-2
5. Tensile Strength Ratio: %, Min.	75	75	75	ASTM D 4867
6. Dry Tensile Strength: psi, Min.	75	75	75	ASTM D 4867
7. Mineral Aggregate Grading Limits				AASHTO T-27
	Percent Passing with Admix			
Sieve Size	**3/8 inch Mix**	**1/2 inch Mix**	**3/4 inch Mix**	
1 inch			100	
3/4 inch		100	90-100	
1/2 inch	100	90-100	43-89	
3/8 inch	90-100	53-89	-	
No. 8	32-47	29-40	24-36	
No. 40	2-24	3-20	3-18	
No. 200	2.0-8.0	2.0-7.5	2.0-6.5	
8. Number of Gyrations	**Low Traffic**		**High Traffic**	
N_{ini}	7		8	
N_{des}	75		100	
N_{max}	115		160	

* Unless otherwise approved by the Engineer.

** The ratio of the mix design composite gradation target for the No. 200 sieve, including admixture, to the effective asphalt content shall be within the indicated range.

710.3.2.3 Moisture Sensitivity Testing: Moisture sensitivity testing will be performed in accordance with ASTM D4867 for both Marshall and Gyratory mix designs, without the freeze/thaw cycles. The minimum required Tensile Strength Ratio is indicated in the tables above.

- End of Section -

SECTION 711

PAVING ASPHALT

711.1 GENERAL:

The asphalt shall be produced from crude asphalt petroleum or a mixture of refined liquid asphalt and refined solid asphalt. It shall be free from ad-mixture with any residues obtained by the artificial distillation of coal, coal tar, or paraffin oil and shall be homogeneous and free from water.

Asphalt shall not be heated during the process of its manufacture, storage, or during construction so as to cause injury as evidence by the formation of carbonized particles.

711.2 TESTING REQUIREMENTS:

Paving asphalt shall be classified by the Performance Grading System and shall conform to the requirements set forth in Table 711-1 and ASTM D6376 with the PAV temperature changes noted herein this table.

TABLE 711-1				
PERFORMANCE GRADING SYSTEM				
	PG 58-22	**PG 64-16**	**PG-70-10**	**PG 76-16**
Original Asphalt				
Viscosity, ASTM D4402 (Note 1) Max. 3 Pa-s, Test Temp, °C	135	135	135	135
Dynamic Shear ASTM D7175 (Note 2) G*/Sin δ, Min., 1.0 kPa Test Temp. @ 10 rad/s, °C	58	64	70	76
Rolling Thin Film Oven Residue (ASTM D2872)				
Mass Loss, Maximum % Dynamic Shear ASTM D7175 G*/Sin δ, Min., 2.20 kPa Test Temp. @ 10 rad/s, °C	1.0 58	1.0 64	1.0 70	1.0 76
Pressure Aging Vessel Residue (ASTM D6521)				
PAV Aging Temperature, °C	100	100	110	110
Dynamic Shear ASTM D7175 G*•Sin δ, Max., 5000 kPa Test Temp. @ 10 rad/s, °C	22	28	34	34
Creep Stiffness, ASTM D6648 (Note 3) S, Maximum, 300.0 Mpa *m*-value, Minimum, 0.300 Test Temp. @60s, °C	-12	-6	0	-6
Direct Tension, ASTM D6723 (Note 3) Failure Strain, Minimum 1% Test Temp. @ 1.0 mm/min. °C	-12	-6	0	-6

On all Grades Flash Point Temperature ASTM D92: Minimum 230 °C and Mass Loss, Maximum 1.00 percent.

NOTES:

(1) This requirement may be waved at the discretion of the specifying agency if the supplier warrants that the asphalt binder can be adequately pumped and mixed at temperatures that meet all applicable safety standards.

(2) For quality control of unmodified asphalt cement production, measurement of the viscosity of the original asphalt cement may be substituted for dynamic shear measurements of G*/sin(d) at test temperatures when the asphalt is a Newtonian fluid. Any suitable standard means of viscosity measurement may be used, including capillary or rotational viscometer (ASTM D4402).

(3) If the Creep Stiffness is below 300 MPa, the direct tension test is not required. If the Creep Stiffness is between 300 and 600 MPa, the direct tension failure strain requirement can be used in lieu of the Creep Stiffness requirement. Direct tension test is recommended for polymer modified asphalt binders. The m-value requirement must be satisfied in all cases.

Design Note: Performance Grade Asphalts are selected for certain reliabilities with respect to high and low pavement temperatures. The specified characteristics are based upon a loading frequency that approximates vehicle speeds of approximately 90 km/hr. Since all binders are frequency dependent, the designer may consider increasing the high temperature requirement for slow transient and standing loads, such as intersection loading. The high temperature requirement may also be increased for excessive numbers of equivalent single axle loads.

711.3 TEST REPORT AND CERTIFICATION:

At the time of delivery of each shipment of asphalt, the supplier supplying the material shall deliver to the purchaser 3 certified copies of the test report which shall indicate the name of the refinery and supplier, type and grade of asphalt delivered, date and point of delivery, quantity delivered, delivery ticket number, purchase order number, and results of the above specified tests. The test report shall be signed by an authorized representative of the supplier certifying that the product delivered conforms to the specifications for the type and grade indicated.

Until the certified test reports and samples of the material have been checked by the Engineer, that material will be only tentatively accepted by the Contracting Agency. Final acceptance will be dependent upon the determination of the Engineer that the material involved fulfills the requirements prescribed. The certified test reports and the testing required in connection with the reports shall be at no additional cost to the Contracting Agency.

711.4 TEMPERATURES:

Unless otherwise specified in these specifications or in the special provisions, the various grades of paving asphalt shall not exceed 340°F. The exact temperature shall be determined by the Engineer.

At no time, after loading into a tank car or truck for transportation from the refinery to the purchaser, shall the temperature of the paving asphalt be raised above 400 degrees F.

Paving asphalt shall be heated in such a manner that steam or hot oils will not be introduced directly into the paving asphalt during heating.

711.5 DISTRIBUTING EQUIPMENT:

Distributing Equipment shall meet the requirements of Section 330.

711.6 CONVERSION OF QUANTITIES:

When pay quantities of paving asphalt are determined from volumetric measurements, the volumetric measurement at any temperature shall be reduced to the volume the material would occupy at 60 degrees F. in accordance with ASTM D1250. In converting volume to weight, the computations shall be based on Table 711-2.

Asphaltenes, % w (max)	D-2006-70	N/A	10.0 Max.	N/A	1.00
Maltene Dist. Ratio	D-2006-70	N/A	0.2-1.4	N/A	0.3-0.6
PC/S Ratio[45] (Min) (Note 4)	D-2006-70	N/A	0.5 Min.	N/A	0.5
Saturated Hydrocarbons,S[5] (note 4)	D-2006-70	N/A	28 Max.	N/A	21-28

Notes:
1. Kreb units (ASTM D562)
2. A full set of tests shall be performed by as specified by the special provisions in the undiluted condition. These tests and any other specified will be performed at the contractor's expense.
3. The Ultraviolet resistance testing results will be provided at no cost to the engineer.
4. Only residue by evaporation shall be run on diluted samples. Specification limits should be diluted rate times minimum residual value of concentrate.
5. PC/S ratio: $\frac{PC + A_1}{S + A_2}$[5]

- End of Section -

(Note: Section 719 has been deleted.)

SECTION 725

PORTLAND AND CEMENT CONCRETE

725.1 GENERAL:

Portland cement concrete shall be composed of cementitious materials, fine and coarse aggregates, water, and, if specified or allowed, certain chemical admixtures and additives.

TABLE 725-1		
CONCRETE CLASSES - MINIMUM REQUIREMENTS		
Class of Concrete	Minimum Cementitious Materials Content (lbs. per cubic yard)	Minimum Compressive Strength (1) at 28 Days (psi)
AA	600	4000
A	520	3000
B	470	2500
C	420	2000

(1) In accordance with section 725.8.

725.2 CEMENTITIOUS MATERIALS:

Cementitious materials to be used or furnished under this specification shall be:

Portland cement, meeting the requirements of ASTM C150
Type II, low alkali, when no other specific type is specified
Type III, low alkali, for high early strength, when applicable or specified
Type V, low alkali, when specified in the special provisions for applications requiring high sulfate resistance

Portland Pozzolan Cement ASTM C595
Type IP (MS), when no other specific type is specified

Supplementary Cementitious Materials (SCM) shall not be used as an additional cementitious materials replacement in concrete in combination with Portland Pozzolan Cement.

Cementitious materials shall be sampled and tested as prescribed in the applicable ASTM specifications. The Contractor shall obtain and deliver to the Engineer a certification of compliance signed by the material manufacturer, identifying the cementitious material and stating that the cementitious material delivered to the batching site complies with the appropriate specifications. When requested by the Engineer, the Contractor shall furnish three copies of the cementitious materials certification. The cost of furnishing tested cementitious materials shall be considered as included in the contract bid price and no additional allowance will be made therefore.

When suitable facilities, as recommended by the Concrete Plant Manufacturer's Bureau, and approved by the Engineer, are available for handling and weighing bulk cementitious materials, such facilities shall be used. Otherwise the cementitious material shall be delivered in original unopened sacks that bear the name or brand of the manufacturer. The type of cementitious material, and the weight contained in each sack shall be plainly marked thereon.

Cementitious materials shall be stored in such manner as to permit ready access for the purpose of inspection and identification, and so as to be suitably protected against damage by contamination or moisture. Should any lot of bulk cementitious material be delivered to the site show evidence of contamination, the Engineer may require that such lot be removed from the site.

725.2.1 Supplementary Cementitious Materials (Pozzolans): Supplementary Cementitious Materials to be used in concrete or furnished under this specification shall conform to the appropriate ASTM requirements as follows:

Fly ash or natural pozzolan	ASTM C618 and C311
Silica Fume	ASTM C1240

Up to 25 percent by weight of the Table 725-1 minimum cementitious materials requirements may be an approved fly ash or natural pozzolan. Additional pozzolanic material in excess of the minimum Table 725-1 requirements may be incorporated into a concrete mix design to achieve enhanced performance, upon approval of the Engineer.

The Contractor shall obtain and deliver to the Engineer a certification of compliance signed by the pozzolan supplier identifying the pozzolanic material and stating the pozzolan delivered to the batching site complies with the appropriate specifications. The cost of furnishing tested pozzolan shall be considered as included in the contract bid price and no additional allowance will be made therefore.

Pozzolanic materials shall be handled and stored in the same manner as other cementitious materials. When facilities for handling a bulk pozzolan are not available, the pozzolan shall be delivered in original unopened sacks bearing the name and brand of the supplier, the type and source of the pozzolan, and the weight contained in each sack plainly marked thereon.

725.3 AGGREGATES:

Coarse and fine aggregate shall conform to the applicable requirements of ASTM C33. Coarse aggregate grading requirements shall conform to the appropriate rock size designation in the Grading Requirements for Coarse Aggregate, Table 2. Fine aggregate grading requirements shall conform to the Fine Aggregate Grading section.

The average value of 3 successive sand equivalent samples shall not be less than 70 when tested in accordance with ASTM D2419. No individual sample shall have a sand equivalent less than 65.

The loss by abrasion in the Los Angeles Abrasion Machine, determined as prescribed in ASTM C131, shall not exceed 10 percent, by weight, after 100 revolutions nor 40 percent after 500 revolutions.

Prior to the delivery of the aggregates and whenever required during concrete production, the Contractor shall make stockpiles available to the Engineer for testing. All required samples shall be furnished at the expense of the Contractor, and the cost of sampling and testing shall be at the expense of the Contracting Agency.

Reclaimed Concrete Materials (RCM) and Reclaimed Asphalt Pavement (RAP) as defined in Section 701 shall not be used in Portland Cement Concrete without the prior approval of the Engineer.

725.4 WATER:

The water used for mixing concrete shall be potable or shall meet the requirements of ASTM C1602, when tested by a qualified independent testing laboratory.

725.5 ADMIXTURES AND ADDITIVES:

Admixtures or additives of any type, except as otherwise specified, shall not be used unless identified in the approved mix design or authorized by the Engineer.

Water reducing admixtures incorporated into the approved concrete mix design shall meet the requirements of ASTM C494 for the appropriate type.

Air entraining admixtures incorporated into the approved concrete mix design shall meet the requirements of ASTM C260.

Pigments incorporated into the approved concrete mix design for integrally colored concrete shall meet the requirements of ASTM C979.

Fibers incorporated into the approved concrete mix shall meet the requirements of ASTM C1116.

Any admixtures used shall be included in the price for that item.

725.6 MIX DESIGN PROPORTIONING:

A concrete mix design carrying the producer's designated mix number for each type of concrete being furnished under these specifications shall be submitted to the Engineer at least once each year for approval. Each design shall utilize the proper proportioning of ingredients to produce a concrete mix that is homogeneous and sufficiently workable to provide a consistent and durable concrete product that meets the specified compressive strength and other properties as required by the application.

In the event there is a modification to the mix design proportions:

(A) Modifications that do not require a new mix design submittal/approval:

(1) Modifications which do not result in batch target weights for the fine aggregate or combined coarse aggregates changing by more than 5 percent from the original approved mix design.

(2) Modifications to the percentage of coarse aggregate fractions that do not change the total coarse aggregate volume.

(3) Modifications to dosages of chemical or air-entraining admixtures, within the manufacturer’s recommendations.

(4) The incorporation or elimination of chemical admixtures which are listed on the mix design to effect a change in the time-of-set (retarders or accelerators).

(B) Modifications that require a new mix design submittal/approval and may require performance verification:

(1) Modification to the class of concrete per Table 725-1.

(2) Modification to the type/class/source of cement, fly ash, natural pozzolan, or silica fume.

(3) Modification to the percentage of fly ash, natural pozzolan, or silica fume.

(4) Modification to a coarse aggregate size designation.

(5) Modification of the type of chemical admixture, or the incorporation or elimination, of an air-entraining admixture.

(6) Modification of coarse or fine aggregate source.

725.7 MIXING:

All proportioning/batching/mixing equipment shall comply with the standards of the Concrete Plant Manufacturer's Bureau and the certification requirements of the Arizona Rock Products Association or National Ready Mixed Concrete Association. The proportioning shall consist of combining the specified sizes of aggregates with cementitious materials, admixtures/additives, and water as herein provided. No method which may cause the segregation or degradation of materials shall be used.

Weighing and metering devices used for the purpose of proportioning materials shall fulfill requirements as to accuracy and tolerance prescribed by the Weights and Measures Division of the State of Arizona and shall be sealed and certified in accordance with the procedures established by this agency. This certification shall not be over 12 months old and shall be renewed whenever required by the Engineer. When portable plants are set up at a new or temporary location, the scales and scale assembly shall be inspected and certificate issued regardless of the date when the scales were last tested. The Engineer may require the Contractor to run a quick scale check at any time with certified weights furnished by the Contractor and order the scale recertified if necessary.

Any admixture/additive shall be measured accurately by mechanical means into each batch by equipment or in a method pre-approved by the Engineer.

The equipment for measuring and supplying the water in the mixer shall be so constructed and arranged that the amount of water to be added to the mixture can be measured, in gallons or by weight. The amount of water shall be varied in accordance with the percentage of free moisture in the material and the requirements of the workability of the aggregate.

Machine mixing will be required in all cases unless pre-approved by the Engineer. Regardless of the method employed, mixing shall be commenced as soon as possible after the cementitious material is placed in contact with the aggregates or water. All concrete mixers shall be of such design and construction, and so operated, as to provide a thoroughly and properly mixed concrete in which the ingredients are uniformly distributed.

725.7.1 Paving and Stationary Mixers: Paving and stationary mixers shall comply with the standards of the Concrete Plant Manufacturer's Bureau and the certification requirements of the Arizona Rock Products Association or the National Ready Mixed Concrete Association.

Mixers shall be maintained in proper and serviceable working condition, and any part or portion thereof that is out of order, or becomes worn to such extent as to detrimentally affect the quality of mixing, shall be promptly repaired or replaced.

The proper proportions of aggregate, cementitious materials, admixtures/additives and water for each batch of concrete shall be placed in the mixer, and shall be mixed for a period of not less than 50 seconds after all such materials are in the drum.

The rotating speed at which the mixer shall be operated shall conform to that recommended by the manufacturer.

The total volume of materials mixed in any one batch shall neither exceed the water level capacity of the mixer nor the manufacturer's catalog rated capacity of the mixer.

725.7.2 Transit Mixers: Transit mixers shall meet the requirements of the Truck Mixer Manufacturer's Bureau and the certification requirements of the Arizona Rock Products Association or the National Ready Mixed Concrete Association. Ready mix concrete and shall comply with ASTM C94 except as herein specified.

Each mixer and agitator shall have attached thereto in a prominent place a metal plate or plates, installed by the manufacturer, on which is plainly marked the capacity of the drum in terms of the volume of mixed concrete and the speed of rotation for the agitating and mixing speeds of the mixing drum or blades.

Each mixer shall have an identification number painted on the truck in such a location that it can be easily read from the batching platform.

The total volume of materials introduced into the mixer for mixing purposes shall not exceed the manufacturer's guaranteed mixing capacity. If the concrete so mixed does not meet the uniformity requirements of this section, the amount of materials charged into the mixer shall be reduced.

The rotation speed at which the mixer shall be operated shall conform to that recommended by the manufacturer.

Each batch of concrete placed in the mixer shall be mixed for not less than 70 nor more than 100 revolutions of the drum or blades, at the speed designated by the manufacturer of the equipment as mixing speed. Additional mixing shall be at the agitating speed designated by the manufacturer of the equipment. The revolving of the drum shall be continuous until the concrete is completely emptied from the drum. Before any portion of the materials for any batch of concrete is placed therein, the drum of the mixer shall be completely emptied of the previously mixed batch.

At the time of delivery to the job site, the Engineer shall be provided with a legible delivery ticket which shall contain the following information:

Date and Truck Number.

Name of the Supplier.

Name of the Contractor.

Specific designation of job (name and location).

Number of cubic yards in the batch.

Time the transit mixer is loaded.

Amount of water added at the job site at request of receiver, and his signature or initials.

Suppliers' mix design code number.

Type and amount of admixture or additive that is not already included in the approved mix design, if any.

Serial number of the ticket.

Additional water may be added on the jobsite in accordance with ASTM C94 Tolerances in Slump section to adjust slump providing the slump after such water addition does not exceed the maximum allowed by these specifications in Section 725.9 (A) (1) and that water so added is mixed into the batch for a minimum of 30 additional revolutions at mixing speed. Loss of cement mortar during discharge which in the opinion of the Engineer would be of sufficient amount to affect the homogeneity of the concrete shall be cause for rejection of the load. The Contractor shall be responsible for all concrete to which water is added at the job site.

725.7.3 Job Mixed Concrete: All job mixed materials and procedures shall be pre-approved by the Engineer. A prepackaged commercial product shall be used for job mixed concrete placement in accordance with the manufacturer's recommended procedure.

In lieu of the use of a prepackaged commercial product, individual ingredients for concrete placement shall be prepared in a watertight container of suitable volume in batches not to exceed 1/3 cubic yard each. Proportioning of batches shall be in accordance with the applicable required mix design in Table 725-1 and Section 725.6. All mixing shall be done prior to placement in the forms and in accordance with the following procedure:

(A) Mixing shall be done in a mechanical batch mixer of approved type.
(B) The mixer shall be rotated at a speed recommended by the manufacturer.
(C) Mixing shall continue for at least 1-1/2 minutes after all materials are in the mixer, unless a shorter time is shown to be satisfactory by the mixing uniformity tests of ASTM C94.
(D) Materials handling, batching, and mixing shall conform to the applicable provisions of ASTM C94.
(E) Suitable records shall be kept to indentify the number of batches, proportions of materials used, and time and date of mixing and placement along with the approximate location in the structure.

725.7.4 Dry Batched Unmixed Concrete: All dry batched unmixed concrete materials and procedures shall be pre-approved by the Engineer. An accurate batch weight shall be provided to record the quantities of cementitious materials, aggregate, admixtures/additives, and water batched into the containers. The date of batching, the container number and the batching certificate number shall be recorded at the time of batching. Copies of the batch weight records shall be submitted to the Engineer upon request.

All dry batched unmixed concrete delivered to the job site shall be stored in containers so constructed that the cement cannot comingle with the water and aggregate within the container. Any admixture/additive added in powder form shall be added to the cement; if added in liquid form, it shall be added to the water.

The contents of the container shall be discharged into a mixer at the job site. Following discharge of the first container into the mixer, the mixer shall be operated at mixing speeds during the discharge of the remaining containers. After the contents of the last container have been discharged into the mixer, the concrete shall be mixed as specified in this specification for transit mixers, and drum or turbine type mixers.

Any spillage of cementitious materials, aggregate, water or admixtures/additives during the filling, transporting, or the discharging of the container, shall be cause for rejection of the container or the contents of the mixer if any portion of the rejected container is discharged into the mixer.

725.7.5 Volumetric Batching and Continuous Mixing Concrete and Equipment: Volumetric-batching and continuous-mixing concrete and equipment may be utilized upon approval of the Engineer for job site concreting applications. Material handling, procedures, and operations shall be in accordance with ACI 304.6R, Guide for the use of Volumetric-Measuring and Continuous-Mixing Concrete Equipment and all concrete produced and all test performed shall be in accordance with ASTM C685, Standard Specification for Concrete Made by Volumetric Batching and Continuous Mixing. All equipment shall meet the requirements of the Volumetric Mixer Standards of the Volumetric Mixer Manufacturers Bureau

and shall have a suitable copyrighted rating plate furnished by the Bureau and attached to the volumetric mixing equipment.

725.8 TESTS AND TEST METHODS:

725.8.1 Field Sampling and Tests: Concrete shall be sampled in accordance with ASTM C172 for determination of temperature, slump, unit weight and yield (when required) and air content (when required) as well as for fabrication of test cylinders for compressive strength determination at 28 days. Samples shall be of sufficient size to perform all the required tests and fabricate the necessary test cylinders but in no case less than 1 cubic foot. Concrete shall be sampled during discharge of the middle portion of the batch. At the discretion of the Engineer, a sample may be obtained at the beginning of the discharge if the properties of the concrete do not appear to be within the specification limits for slump or temperature.

All sampling and testing shall be done by a certified technician meeting the requirements of the ACI Concrete Field Testing Technician, Grade I or equivalent.

Temperature of the concrete mixture shall be determined in accordance with ASTM C1064.

Slump of the concrete mixture shall be determined in accordance with ASTM C143.

Air content of the concrete mixture (when required) shall be determined in accordance with ASTM C231 or C173, whichever is applicable.

Unit weight and yield of the concrete mixture (when required) shall be determined in accordance with ASTM C138.

All compressive strength test specimens shall be made, cured, handled, protected, and transported in accordance with the requirements of ASTM C31. The contractor shall provide and maintain for the sole use of the testing laboratory/technician adequate facilities for safe storage and proper curing of concrete test cylinders on the project site including sufficient access on weekends and holidays to allow the timely pick-up of cylinders specimens. Any and all deviations from the standard procedure of any test method shall be promptly identified and corrected. Any deviations shall be clearly noted by the testing laboratory on all written reports. Testing results obtained from non-standard testing procedures shall be considered invalid and discarded by Engineer.

Sampling and testing performed for concrete acceptance will be at the expense of the Contracting Agency. Sampling and testing for the Contractor's purposes of quality control or other needs shall be at the Contractor's expense.

725.8.2 Concrete Cylinder Test: A cylinder strength test shall be the average of the strengths of at least two 6 inch by 12 inch cylinders or at least two 4 inch by 8 inch cylinders made from the same sample of concrete and tested at 28 days. An adequate number of cylinder specimens shall be made for each 50 cubic yards or not less than each half-day's placement of each class of concrete. All specimens will be tested in a laboratory approved by the Engineer in accordance with ASTM C39 for concrete acceptance. Should an individual cylinder show evidence of improper sampling, molding, curing, or testing, the results shall be discarded and the compressive strength shall be the result of the average of the remaining cylinder(s). Additional cylinder specimens may be made and tested at other ages to obtain additional compressive strength information and shall not be considered as acceptance tests. Cylinder testing performed for concrete acceptance will be at the expense of the Contracting Agency. Cylinder testing for the Contractor's purposes of quality control or other needs shall be at the Contractor's expense.

725.8.3 Additional Concrete Testing: If the 28-day strength test does not meet the compressive strength requirements, additional concrete testing may be performed to further evaluate the concrete in question for purposes of acceptability or payment. This may involve testing of additional cylinders at later ages, (for example - hold cylinders at 56 days or more), or core testing to determine in-place concrete strengths. This additional testing and all coring repairs shall be pre-approved by the Engineer and at the expense of the Contractor. If core testing is performed, at least three representative cores shall be obtained, conditioned and tested in accordance with ASTM C42 from each concrete member or area of concrete to be tested at locations designated by the Engineer. Cores damaged subsequent to or during removal shall be rejected and additional core samples taken. Cores shall be obtained and delivered to a laboratory acceptable to the Engineer in time to allow complete strength testing within 48 days of original concrete placement. The Contractor may elect to have a representative present during sampling and testing. A core strength test shall be the average of the results of the three cores. Should an individual core show evidence of improper sampling, curing, or testing, the results shall be discarded and the compressive strength shall be the result of the average of the remaining core(s). Results of the core strength testing shall replace the results of the cylinder strength test for that sample.

725.9 ACCEPTANCE:

(A) **Plastic Concrete Properties**

(1) The slump of the concrete shall meet the requirements of ASTM C94 Tolerances in Slump section. When the approved mix design or project specification requirements for slump are a "maximum" or "not to exceed", the following tolerances apply:

Specified slump:	If 3" or less	If more than 3"
Plus tolerance	0 inch	0 inch
Minus tolerance	1 1/2 inch	2 1/2 inch

When the approved mix design or project specification requirements for slump are not written as a "maximum" or "not to exceed", the following tolerances apply:

For design slump of:	Tolerance
2 inch and less	+/- 1/2 inch
More than 2 through 4 inch	+/- 1 inch
More than 4 inch	+/- 1 1/2 inch

(2) Limit the maximum allowable temperature of the concrete mixture immediately before placement to 90 degrees F unless otherwise specified or unless a higher allowable temperature is pre-approved by the Engineer. At the discretion of the Engineer, recommended practices in ACI 305, Specification for Hot Weather Concreting, can provide good reference information and may be used to modify maximum allowable concrete temperature and acceptance.

Per ACI 306, Specification for Cold Weather Concreting, when the atmospheric temperature at the time of placing concrete is above 30°F the temperature of the concrete, as placed, shall not be less than 60°F. When the atmospheric temperature at the time of placing concrete is between 0°F and 30°F the temperature of the concrete, as placed, shall not be less than 65°F.

(3) Air entrained concrete shall meet the requirements of ASTM C94 Air-Entrained Concrete section. The air content of air-entrained concrete when sampled from the transportation unit at the point of discharge shall be within the approved mix design tolerance or +/- 1.5 % of the specified value. When a representative sample taken prior to discharge shows an air content below the specified level by more than the allowable tolerance, additional air entraining admixture shall be added to the concrete mix to achieve the desired air content level, followed by a minimum of 30 revolutions at mixing speed.

(4) Per ASTM C94 Mixing and Delivery section, discharge of the concrete shall be completed within 1 1/2 hour after the introduction of the mixing water to the cementitious materials or the introduction of the cementitious materials to the aggregates. The Engineer may allow the continuation of concrete placement after the 1 1/2 hour time limit has been reached if the concrete is of such slump or workability that it can be placed without the addition of water to the batch.

Any concrete failing to meet the tolerances for plastic concrete properties in 725.9 (A) (1) through (4) shall be reviewed by the Engineer and is subject to rejection.

(B) **Hardened Concrete Properties – Compressive Strength**

Compressive strength of concrete shall be determined on the basis of cylinder strength tests obtained in accordance with section 725.8.2 and shall be acceptable if the tests meet or exceed the minimum specified strength. When the validity of cylinder strength tests are suspect, the strength of concrete in question shall be determined in accordance with Section 725.8.3.

When compressive strength test results are less than the specified minimum, an Engineering Analysis to determine the impact of the strength reduction may be required by the Engineer prior to the decision to accept or reject the concrete. The Engineering Analysis will be at the Contractor's expense. Any concrete that is rejected by the Engineer shall be removed and replaced by the Contractor at the Contractor's expense.

When concrete is accepted by the Engineer on the basis of test results of less than 100% of the required minimum compressive strength, an adjustment in the concrete unit price may be made for the quantity of concrete represented by such strength tests in accordance with Table 725-2.

TABLE 725-2			
Adjustment in Concrete Unit Price Based on Strength Deficiency			
Class AA and Class A		Class B and Class C	
Percent of Specified Minimum 28-day Compressive Strength Attained (Nearest 1%)	Percent of Concrete Unit Price Allowed	Percent of Specified Minimum 28-day Compressive Strength Attained (Nearest 1%)	Percent of Concrete Unit Price Allowed
100 % or greater	100	100 % or greater	100
98-99	90	95-99	95
96-97	85	90-94	90
95	80	85-89	85

- End of Section -

SECTION 726

CONCRETE CURING MATERIALS

726.1 GENERAL:

Curing materials shall consist of waterproof paper, polyethylene film or liquid membrane-forming compounds which, when applied to fresh concrete, will inhibit moisture loss and reduce temperature rise during the curing period. All curing materials and methods shall be approved by the Engineer prior to use. Wet coverings such as burlap, cotton mats, or other moisture-retaining fabrics also may be used, or may be required by special provisions.

726.2 MATERIALS:

(A) Waterproof paper, or polyethylene film, shall conform with AASHTO M-171.

(B) Liquid membrane-forming compounds shall conform with AASHTO M-148. Type 1 compound with either a Class A or Class B vehicle shall be used for concrete structures, except bridge decks. Type 2 compound, with either a Class A or Class B vehicle shall be used for Portland cement concrete pavement, bridge decks and approach slabs.

(C) Burlap cloth made from jute or kenaf shall conform to AASHTO M-182.

- End of Section -

SECTION 727

STEEL REINFORCEMENT

727.1 GENERAL:

The following specifications set forth the requirements for bar reinforcement, wire reinforcement, and wire mesh reinforcement. The reinforcement shall conform accurately to the dimensions and details indicated on the plans or otherwise prescribed and before being placed in any concrete work, shall be thoroughly cleaned of all loose rust, mill scale, mortar, oil, dirt, or coating of any character, which would be likely to destroy, reduce, or impair its proper binding with the concrete.

No reinforcing steel will be accepted under this specification until it has been approved by the Engineer. When required by the Engineer, the Contractor or supplier shall furnish a spot sample taken on the project and notify the Engineer as to when and where they will be available. Such samples shall be furnished at the expense of the Contractor or supplier, but the cost of any testing that may be required will be borne by the Contracting Agency. Samples shall only be taken in the presence of the Engineer. The Contractor shall furnish 3 certified mill test reports or certificates of compliance for each heat or size of steel which can be clearly identified with the lot. When such information has been furnished, placing of the steel will not be held up until results of spot samples have been received. Unless otherwise specified, all reinforcing steel bars shall be deformed intermediate grade 40 billet steel conforming with ASTM A615 and the shapes shall conform with ASTM B670.

In testing bar reinforcement, only the theoretical cross-sectional area will be used in all computations.

Bending of steel shall conform to the requirements of Section 505.5.2.

The various grades of steel shall not be used interchangeably in structures.

727.2 WIRE REINFORCEMENT:

Wire reinforcement shall in all respects fulfill requirements prescribed in ASTM A82.

727.3 WIRE MESH REINFORCEMENT:

Mesh reinforcements shall conform to ASTM A185. The gage of the wire and the dimension of the mesh will be specified in the special provisions or shown on the plans. The wire mesh reinforcement shall be so constructed as to retain its original shape and form during necessary handling. The effective cross-sectional area of the metal shall be equal to that specified or indicated on the plans.

727.4 WIRE TIES:

Wire for ties shall be black, annealed, not lighter than 16 gage.

- End of Section -

SECTION 728

CONTROLLED LOW STRENGTH MATERIAL

728.1 GENERAL:

Controlled Low Strength Material (CLSM) is a mixture of cementitious materials, aggregates, admixtures\additives, and water that, as the cementitious materials hydrate, forms a soil replacement. CLSM is a self-compacting, flowable, cementitious material primarily used as a backfill, structural fill, or a replacement for compacted fill or unsuitable native material. Placement and usage of each type of CLSM is described in Section 604.

728.2 MATERIALS:

Cementitious materials shall conform to Section 725.2.

Coarse aggregate shall conform to ASTM C-33 grading size No. 57. The size and gradation of fine aggregates (sand) shall conform to ASTM C-33. Alternate materials meeting the applicable requirements of Section 701 or 702 such as combinations of other aggregates, Aggregate Base Course (ABC) or Reclaimed Concrete Material (RCM) may be used to replace the required coarse and fine aggregate as long as the approved mix design meets the requirements of Table 728-1 and is approved by the Engineer.

Water shall conform to Section 725.4.

728.3 PROPORTIONING OF MIXTURES AND PRODUCTION TOLERANCES:

Proportioning of the mixture shall comply with Section 725.6 and Table 728-1. The CLSM shall have consistency, workability, plasticity, and flow characteristics such that the material when placed is self-compacting. A minimum of 40% coarse aggregate shall be used. A mix design shall be submitted for the Engineer's approval prior to the excavation for which the material is intended for use. Sampling shall be in accordance with ASTM D5971. The flow consistency shall be tested in accordance with ASTM D6103. Unit weight (when applicable) shall be obtained by ASTM D6023. Compressive strength shall be tested in accordance with ASTM D4832.

TABLE 728-1	
CONTROLLED LOW STRENGTH MATERIAL REQUIREMENTS	
Portland Cement Content, Sack/cu yd	Flow, inches
1/2 Sack	9±2
1 Sack	9±2
1 1/2 Sack	9±2

Note for Table 728-1:

(1) CLSM mixes meeting the table requirements will not generally be placeable by means of a concrete pump or may not provide the needed workability for certain conditions. When pumpable mixes or increased workability are required, the addition of fly ash or a natural pozzolan in excess of the required Portland Cement Content may be used.

(2) Ready-mixed structural concrete or grout shall not be used in lieu of CLSM without prior approval from the Engineer and shall be subject to rejection.

728.4 MIXING:

CLSM mixing shall comply with Section 725.7 Mixing shall continue until the cementitious material and water are thoroughly dispersed throughout the material. Mixes shall be homogenous, readily placeable and uniformly workable.

- End of Section -

SECTION 770

STRUCTURAL AND RIVET STEEL, RIVETS, BOLTS, PINS, AND ANCHOR BOLTS

770.1 GENERAL:

All steel, unless otherwise designated on the plans or in the special provisions, shall conform to the requirements of ASTM A36.

Report of Tests: Before fabrication, the Contractor shall furnish to the Engineer a certified mill report in triplicate, for each identifiable melt of steel or iron from which the material is to be fabricated. The report shall include the chemical and physical tests required by the ASTM specifications.

Additional Tests: The Contracting Agency reserves the right to require and to make additional mill and laboratory tests. The number of such additional tests will be limited as follows, except that in the case of failure of the material to comply with the ASTM requirements, more tests will be made:

Structural steel, 1 complete test for each heat or each 10 tons of identifiable stock. Rivets, 1 complete test for each size. Bolts, 1 complete test for each lot.

Identifiable stock is material for which authentic records of the chemical and physical properties are available.

Test specimens shall be furnished, cut, and machined in accordance with the ASTM specification, for the material to be tested, as referred to herein. Test specimens shall be furnished and machined by the Contractor at no additional cost to the Contracting Agency.

Mill Tolerances: Rolling and cutting tolerances, permissible variations in weight and dimensions, defects and imperfections shall not exceed the limits for structural steel contained in ASTM A6.

Stock Material: When the Contractor proposes to use material already in stock, he shall notify the Engineer of such intention at least 10 days in advance of beginning fabrication, to permit sampling and testing.

770.2 STRUCTURAL STEEL:

Stock Materials: The Contractor shall select the material he wishes to use from stock. The Contractor shall furnish 3 certified mill reports for each of the heat numbers. Two samples shall be taken by a representative of the Engineer from each heat number, one for the tension test and one for the coldbend test. If the heat numbers cannot be identified, the representative of the Engineer shall select random test specimens from the unidentifiable heats. The number of such test specimens shall be at the discretion of the Engineer. The cost of all tests on stock material shall be borne by the Contractor.

High Strength Low-Alloy Structural Steel: The material shall conform to the requirements of ASTM, A572, A709 or A992, as specified in the special provisions.

General Purpose Structural Steel: Structural steel shall conform to the requirements of ASTM A36 with a minimum of 0.2 percent copper.

770.3 RIVETS:

Stock Material: Rivets taken from identifiable stock shall be accepted by the Engineer in accordance with this specification.

Rivets from unidentifiable stock, for which authentic records of the chemical and physical properties are not available, shall not be used except where shown on the plans or when approved by the Engineer.

High-Strength Structural Rivet Steel: The material shall conform to the requirements of ASTM A502.

Structural Rivet Steel: The material shall conform to the requirements of ASTM A502, except that the test specimen shall be bent upon itself when performing the bend test.

770.4 BOLTS:

Unfinished Bolts: The bolts shall have square heads and square nuts unless otherwise specified. The bolts shall be long enough to extend entirely through the nut but not more than 1/4 inch beyond. Washers shall not be furnished unless specified.

Steel bolts shall conform to the requirements of ASTM A307, except that steel manufactured by the acid Bessemer process shall not be used.

High Strength Bolts: High strength bolts shall conform to the provisions of the specification for the design, fabrication and erection of structural steel for buildings of the AISC.

770.5 ANCHOR BOLTS:

Anchor bolts shall be manufactured from steel conforming to ASTM A36 or A307.

770.6 MILD-STEEL FORGINGS FOR STRUCTURAL PURPOSES:

Steel forgings shall be made from steel of forging quality and shall conform to the requirements of ASTM A668. They shall be Class C forgings with a maximum carbon content of 0.35 percent and shall be given a thorough annealing. The metal shall have a minimum Brinnel hardness number of 130, and a maximum of 190, when tested in accordance with ASTM E10.

- End of Section -

INDEX

Abbreviations, 101-1
ABS Truss Pipe, 744-1
Acceptance, 105-6
Final Acceptance, 105-6
Partial Acceptance, 105-6
Access to Property, 340-2
Actual Cost Work, 109-3
Addendum, 101-4
Adjusting, 345-1
Frames, 345-1
Manhole and Valve Covers, 345-1
Valve Boxes, 345-1
Water Meter Boxes, 345-1
Aggregate, 701-1
Mineral, 714-1
Aggregate Base
Course, 342-1, 342-2
Aggregate for
Asphalt Chip Seal, 310-1, 330-1
Asphalt Concrete Overlay, 310-1
Chips, 330-1
Fog Seal, 333-1
Hot Asphalt-Rubber Seal, 335-1
Portland Cement Concrete, 324-1, 342-1, 725-1
Portland Cement Treated Base, 705-1
Precoated Chips, 716-2
Riprap, 220-1
Road-Mixed Surfacing, 320-1
Sand Blotter, 333-1
Slurry Seal, 331-1, 715-1
Subdrainage, 605-1
Trenching, 360-1, 615-1
Uncoated Chips, 716-2
Aggregate Paving
Exposed, 343-1
Air Release and Vacuum Valves, 610-5, 630-7
Air Test
Sewer Lines, 615-3
Alley Entrances, 340-1
Aluminum Handrails, 520-1
Anti-Stripping Agent, 710-2
Approval of
Bonds and Insurance, 109-5
Contract, 103-4
Materials, 106-1
Proposal, 102-1, 103-1
Shop Drawings, 101-8, 105-1
Subcontracts, 108-1
Substitutes, 106-2
Archaeological Reports, 107-2
Asbestos-Cement Pipe and Fittings for Storm Drain and Sanitary Sewer, 737-1
Asbestos-Cement Water Pipe and Fittings, 752-1
Asphalt
Concrete, 710-1
Emulsified, 333-1, 713-1
Liquid, 320-1
Milling, 317-1
Paving, 711-1
Rubber, 717-1
Asphalt Chip Seal, 330-1
Asphalt Concrete, 717-1
Preservative Seal, 334-1, 718-1
Asphalt Concrete Pavement, 321-1
Curbs, 324-2
Asphalt Distributing Equipment, 330-3
Asphalt Emulsion
Slurry Seal Coat, 331-1
Asphalt Pavement Core Bonding Materials, 708-1
Assignment of
Contract, 108-1
Payments, 109-2
Authority of the
Engineer, 109-5
Inspector, 105-4
Award
Cancellation of, 103-1
Execution, 103-1
of Contract, 103-1
Backfill
Structure, 206-1
Barricades and Warning Signs, 107-3
Base Materials, 702-1
Crushed Aggregate, 702-1
Decomposed Granite, 702-2
Processed Natural Material, 702-2
Beginning Work, 108-1
Bench Marks, 105-4
Bid Guarantee
Amount of, 103-1
Forfeiture of, 103-4
Proposal, 103-2
Return of, 103-1
Bidder
Disqualification, 102-3
Eligibility and Preference, 102-1
Successful, 102-3
Bidding Requirements and Conditions, 102-1
Bituminous Prime Coat, 315-1
Blasting
Discontinue, 107-4, 205-1
Operations, 107-4
Bolts
Anchor, 770-1
Bonds
Acceptable to, 103-2
Amount, 103-2
Executed by, 103-2
Proposal Guarantee, 103-2
Requirement of, 103-1
Borrow Excavation
Local and Imported, 210-1
Placing and Compacting, 210-1
Brick
Building, Facing and Manhole, 775-1
Concrete Paving, 342-1
Decorative Pavement, 342-1
Brick Masonry
Bricklaying, 511-1
Curing, Grouting and Reinforcing, 511-1
Bridges
Concrete, 505-1
Steel, 515-1
Cable
Installation, 360-1
Cancellation of

INDEX

Award, 103-1
Contract, 108-3
Cast Iron Water Pipe, 750-1
Castings
Gray Iron, 787-1
Cast-in-Place Concrete Pipe, 620-1
Construction Methods, 620-1
Excavation, 620-1
Materials, 620-1
Methods of Tests, 620-3
Placement, 620-2
Catch Basins, 505-1, 601-2
Cement Concrete
Cement, 725-1
Cement Mortar and Grout, 776-1
Cement Treated Base, 312-1
Certificate of
Compliance or Analysis, 106-1
Insurance, 103-2
Weighmaster's, 109-1
Chain Link Fences, 420-1, 772-1
Change Order
Alteration of Work, 104-2, 109-2
Extension of Time, 108-3
Extra Work, 104-3, 109-3
Payment, 104-2
Unreasonable Circumstances, 109-7
Changed Conditions
Additional Compensation, 110-2
Additional Time, 110-2
Dispute Resolution, 110-1
Notification, 110-1
Channels
Open, 215-1
Chip Seal, 330-1
Application, 330-1
Materials, 330-1
Weather Conditions, 330-1
Chlorine
Disinfecting Water Mains, 611-2
City Sealer of Weights, 109-1
Classes, Grades and Types
Liquid Asphalt, 712-1
Pavement, 710-1
Paving Asphalts, 711-1
Clay Pipe Vitrified, 743-1
Clean Up
During Construction, 104-2
Final, 104-2
Clearing and Grubbing, 201-1
Coating Corrugated Metal Pipe and Arches, 760-1
Collusion
Evidence of, 103-3
Commencement, Prosecution and Progress, 108-1
Compensation for
Alteration of Work, 109-2
Change Orders, 104-2
Extra Work, 109-3
Concrete
Alley Entrance, 340-1
Asphalt, 710-1
Blocks, 775-1
Curb, 340-1
Curing Materials, 726-1
Driveway, 340-1
Gutter, 340-1
Masonry Units, 775-1
Non-Renforced Pipe, 736-1
Paving Stone or Brick, 342-1
Portland Cement, 725-1
Pressure Pipe, 758-1
Sidewalk, 340-1
Sidewalk Ramps, 340-1
Concrete Block Masonry, 510-1
Construction, 510-1
Curing, 510-2
Mortar and Grout, 510-2
Reinforcing, 510-1
Tests, 776-2
Concrete Curing Materials, 726-1
Concrete Pipe
Cast-in-Place, 620-1
Lining, 741-1
Non-Reinforced Concrete, 736-1
Reinforced, 735-1
Concrete Structures, 505-1
Concrete Deposited Underwater, 505-9
Curing, 505-9
Dimensional Tolerances, 505-12
Falsework, 505-3
Finishing Concrete, 505-10
Forms, 505-1
Placing Concrete, 505-6
Placing Reinforcement, 505-4
Subgrade, 505-1
Conformity with Plans and Specifications, 105-2
Construction
Cleanup and Dust Control, 104-1, 104-2
Contractor's Schedule, 108-1
Fill, 211-1
Maintenance During, 105-5
Manhole, 625-1
Reclaimed Water Line, 616-1
Riprap, 220-1
Stakes, Lines and Grades, 105-4
Storm Drain, 618-1
Contract
Approval, 103-4
Assignment, 109-2
Award and Execution of, 103-1
Bonds Requirement, 103-1
Execution, 103-4
Failure to Complete, 108-4
Failure to Execute, 103-4
Final Acceptance, 105-6
Final Payment, 109-6
Insurance, 103-2
Labor Requirements, 107-2, 107-4
Partial Acceptance, 105-6
Partial Payments, 109-5
Subletting of, 108-1
Termination, 108-5
Time Extension, 108-3
Time of Completion, 108-1
Contractor's
Accident Prevention Requirements, 107-4

Construction Schedule, 108-1
Correspondence to, 108-1
Default, 108-5
Eligibility and Preference, 102-1
Examine Site Prior to Bidding, 102-1
Liability, 107-1
Marshaling Yard, 107-3
Notice to Proceed, 108-1
Notify Public Utilities, 105-3, 107-5
Personnel and Equipment, 108-2
Requested Changes, 104-2
Responsibilities, 107-5, 108-2
Superintendent, 105-2, 105-5
Control of
Materials, 106-1
Work, 105-1
Controlled Low Strength Material, 728-1
Mixtures and Production Tolerances, 728-1
Payment, 604-2
Performance Testing, 604-2
Placement of, 604-1
Cooper Pipe, Tubing and Fittings, 754-1
Cooperation
Between Contractors, 105-4
with Utilities, 105-3
Coordination of Plans and Specifications, 105-2
Corrugated Metal Pipe and Arches, 621-1
Coating, 760-1
Installation, 621-1
Test Specimens, 621-2
Cover Material for Chip Seal, 716-1
Crack Sealing, 336-1
Application, 336-1
Cleaning and Preparing Cracks or Joints, 336-2
Equipment, 336-1
Materials, 336-1
Opening to Traffic, 336-2
Pavement Temperatures, 336-2
Crushed Aggregate, 702-1
Curbs
Asphalt, 324-2
Concrete, 340-1
Precast Safety, 410-1
Curing
Cast-in-Place Concrete Pipe, 620-2
Concrete block Masonry, 511-1
Concrete Curbs, Gutters and Sidewalks, 340-3
Concrete Structures, 505-7, 505-9
Gunite, 525-2
Materials, 726-1
Precast Prestressed Concrete Members, 506-1
Damages
Liquidated, 108-4
Decomposed Granite, 430-2, 702-2
Decreased Quantities, 109-1
Definitions, 101-1
Definitions and Terms, 101-4
Delays
Asbestos, 107-2
Between Contractor's, 105-3
Beyond the Control of Contractor, 108-3
Contracting Agency, 108-4
Extension of Time, 108-3
Utility Owners, 105-3
Discontinue Blasting, 107-4
Discrimination XE "Subcontracts:Discrimination Clause" Clause, 107-1
Disinfecting Water Mains, 611-1
Application of Liquid Chlorine, 611-2
Chlorinating Valves and Hydrants, 611-3
Chlorine Residual, 611-2
Chlorine-Bearing Compounds in Water, 611-2
Cleaning and Treating Pipe, 611-1
Final Flushing, Sampling and Testing, 611-3
Flushing Completed Pipe Lines, 611-1
Laying Pipe, 611-1
Methods of Applying Chlorine, 611-2
Packing Material, 611-1
Point of Application, 611-2
Preventing Reverse Flow, 611-3
Preventing Trench Water from Entering Pipe, 611-1
Rate of Application, 611-3
Repetition of Chlorination Procedure, 611-4
Retention Period, 611-3
Disposal of Surplus Material, 205-2
Dispute Resolution, 110-1
Administrative Process, 110-2
Amount of Dispute, 110-4
Arbitration, 110-4
Dispute Review Board, 110-4
Final Documentation, 110-5
Mediation, 110-3
Disqualification of Bidders, 102-3
Drawings
Shop, 105-1
Driveways
Access, 107-5, 340-2, 401-1
Drop Sewer Connections, 625-1
Dry Barrel/Fire Hydrants, 756-1
Ductile Iron Water Pipe, 750-1
Dust Control, 230-1
Dust Palliative, 792-1
Application, 230-1
Curing, 230-3
Deficiencies and Warranty, 230-4
Environmental Criteria, 792-4
Materials, 792-1
Measurement, 230-4
Performance Standards and Test Methods, 792-3
Quality Control, 230-4
Weather Conditions, 230-3
Duties of Inspector, 105-4

Earthwork
Excavation, 215-1
Fill and Backfill, 215-2
for Open Channels, 215-1
Grading, 215-2
Stripping, 215-1
Eligibility of Contractor, 102-1
Emergency
Contractor's Representative, 104-1, 105-2
Defects, 108-4
Services for Public, 104-1
Emulsified Asphalt
Grades, 713-1

INDEX

Emulsified Asphalts Materials, 713-1
Encasement of
Sewer Pipe, 602-1
Water Pipe, 602-1
Engineer
Authority of, 105-1
Decisions, 105-1
Suspension of Work, 104-2, 108-3
Equipment
Approval of, 106-2
Asphalt Distributors, 330-3
Rental Rate, 109-4
Storage of, 106-2
Examination of
Plans, 102-1
Site of Work, 102-1
Special Provisions,102-1
Excavation
Borrow, 210-1
Roadway, 205-1
Structure, 206-1
Excavation, Borrow Roadway, Structure, Trenches, 601-1
Execution of Contract, 103-4
Exfiltration Test, Sewer Lines, 615-2
Existing Improvements
Removal of, 350-1
Expansion Joint Filler, 729-1
Application, 729-2
Pour Type, 729-1
Premolded, 729-1
Test Report and Shipment Certificate, 729-2
Explosives
discontinue use of, 107-4
Use of, 107-3
Exposed Aggregate Paving, 343-1
Extension of Time, 108-3
Extra Work
Actual Cost, 109-3
Claims for, 104-3
Method of Ordering, 109-3
Method of Payment, 109-3
Extruded
Galvanized Pipe, 753-1
Polyethylene Pipe, 755-1
Failure to
Complete on Time, 108-4
Execute Contract, 103-4, 108-5
Maintain Construction, Roadway or Structure, 105-5
Federal Aid Projects, 401-2
Fence
Chain, 772-1
Fill Construction, 211-1
Compacting, 211-1
Placing, 211-1
Tests, 211-2
Final
Acceptance, 105-5, 105-6
Cleaning Up, 104-2
Inspection, 105-6
Fire Hydrants, 756-1
Installation, 756-2
Fittings, 744-1
Flagmen or Pilot Cars, 401-1
Flexible Metal Guardrail, 415-1
Fog Seal Coats, 333-1
Application, 333-1
Asphalt Emulsion Application, 333-1
Materials, 333-1
Preparation of Surfaces, 333-1
Protection for Adjacent Property, 333-2
Protection of Treated Surface, 333-2
Sand Blotter, 333-1
Test Reports and Certification, 333-1
Weather Conditions, 333-1
Forfeiture of
Contract, 108-5
Fortfeiture of
Proposal Guarantees, 103-4
Foundation Data
Test Holes, 601-6
Foundation Material Treatment, 206-1
Furnished Materials, 106-3
Galvanized Pipe and Fittings, 753-1
Galvanizing, 771-1
Geogrid Reinforcement, 306-1
Placement, 306-1
Placing and Compacting Aggregate Fill, 306-2
Repair, 306-2
Geosynthetic, 796-1
Requirements, 796-1
Test and Certification Requirements, 796-3
Grade
Trench, 601-1
Grading
Crushed Aggregate, 702-1
Earthwork for Open Channels, 215-2
Parkway, 424-1
Paving Asphalt, 711-1
Subgrade, 605-1
Under Pavements, 301-2
Granular Material, 601-6
Gray Iron
Castings, 787-1
Ground Water
Levels, 1
Grout
Bonding, 506-5
Concrete Block Masonry, 510-2
Masonry Mortar, 776-1
Reinforced Brick Masonry, 511-1
Grubbing and Clearing, 201-1
Guarantee
Bid, 102-2
Forfeiture of, 103-4
Proposal, 102-2
Provisions, 108-3
Return of, 103-1
Workmanship and Materials, 108-3
Guardrail, 415-1
Gutter, 340-1
Handrail
Aluminum, 520-1
Handrails
Steel, 520-1
Health, Safety and Sanitation, 107-2
Holes

Tests, 601-6, 603-2
Hot In-Place Recycling, 327-1
Hydrants, Fire, 610-5
Installation, 610-2
Types, 756-1
Working Around, 107-5
Inspection
of Materials, 106-1
of Plant, 106-1
of Trees and Shrubs, 430-2
of Work, 105-5
Section to be Notified, 108-1
Inspector
Authority of, 105-4
Duties of, 105-4
Installation of
Cable, 360-1
High Density Polyethylene Pipe, 603-2
Monuments, 405-1
Sprinkler Irrigation System, 440-1
Telecommunications, 360-1
Insurance
Approval of, 103-2
Contractor's, 103-2
Damage Claims, 103-2
Fire and Extended Coverage, 103-3
Property Damage, 103-2
Public Liability, 103-2
Worker's Compensation, 103-2
Iron Water Pipe and Fitting
Cast Iron, 750-1
Ductile Iron, 750-1
Irregular Proposals, 102-2
Irrigation Structures, 350-1
Jacked Steel Casing, 602-1
Jetting
for Settling Trench Backfill, 601-5
Joint Filler, 729-1
Joints
Cast-in-Place Concrete Pipe, Stoppage, 620-2
Concrete Structures, 505-7
Concrete, Curb, Gutter and Sidewalks, 340-2
Corrugated Metal Pipe, 621-1
High Density Polyethylene Pipe, 738-2
Iron Water Pipe, 750-1
Mortar, Brick, 511-1
Mortar,Concrete Block, 510-1
Non-Reinforced Concrete Pipe, 736-1
Pneumatically Placed Mortar, 525-2
Portland Cement Concrete, 324-5
Reinforced Concrete Pipe, 735-1
Sewer Lines, 615-2
Subdrainage Systems, 605-1
Vitrified Clay Pipe, 615-2
Water Lines, 610-6
Labor and Materials
Payment Bond, 103-2
Labor Requirements, 107-1, 108-2
Laboratory Tests, 106-1
Landscape and Property Protection and Restoration, 107-4
Landscaping, 430-1
and Planting, 430-1, 795-1
Materials, 795-1
Laws
Contractor's Responsibility to Observe, 107-1
Legal Regulations and Responsibility to Public, 107-1
Legal Rights
No Waiver of, 107-6
Lime Stabilization, 306-1
Limitation of Operations, 108-2
Lining for Reinforced Concrete, 741-1
Installation, 741-1
Sanitary Sewer Pipe, 741-1
Testing and Repairing, 741-3
Liquid Asphalt, 712-1
Liquidated Damages, 108-4
Location of Underground Utilities
Expose All Underground Utilities, 107-5
Notify Utility Companies, 105-2, 107-2
Protection Thereof, 107-4
That Differ From Those Shown, 105-3
Location of Underground Utilties
Notify Prior to Blasting, 107-3
Lumber, 778-1
Maintenance
During Construction, 105-5
of Traffic, 104-1
Unsatisfactory, 105-2, 105-5
Manhole Construction, 625-1
Marshaling Yard, 107-3
Marshall Mix Design, 710-3
Masonry Mortar and Grout, 776-1
Material
Payment of, 109-4
Materials
Approval, 108-1
Control of, 106-1
Equal, 106-2
Furnished, 106-3
Handling, 106-3
Landscape, 795-1
New and Unused, 106-1
Patented, 106-2
Quality, 106-1
Reasonably Acceptable, 105-2
Rejection, 105-5, 106-1
Samples and Tests, 106-1
Source of, 106-1
Storage of, 106-2
Substitutions, 106-2
Unacceptable, 106-3
Measurements
Actual Cost Work, 109-3
Assignment of Payments, 109-2
Compensation for Alteration of Work, 109-2
Dollar Value of Major Item, 109-7
Payment, 109-1
Payment for Bond Issue and Budget Projects, 109-5
Payment for Delay, 109-7
Payment for Improvement District Projects, 109-5
Payment for Mobilization/Demobilization, 109-7
Quantities, 109-1
Mechanically Stablilized Subgrade, 306-1
Meter Services Connections
Water, 631-1
Methods and Equipment, 108-2

Microsurfacing Materials, 714-1
Microsurfacing Specification
Application, 331-4
Microsurfacing Specifications, 331-1
Equipment, 331-2
Mix Design, 331-1
Proportioning, 331-1
Testing, 331-2
Mill Reports
Steel Reinforcement, 727-1
Structural Steel, 515-1
Mills Reports
Handrails, Steel and Aluminum, 520-1
Mineral
Filler, 714-1
Mineral Admixture, 710-2
Modification of Subgrade, 306-1
Monthly Payments, 109-5
Monuments, 405-1
Construction, 405-1
Installation, 405-1
Protection, 107-4
Name Stamped in Concrete, 340-3
Noise, 107-3
Non-Discrimination Statute, 107-1
Non-Reinforced Concrete Pipe, 736-1
Care of Pipe and Materials, 736-2
Curves, Bends and Closures, 736-1
Materials, 736-1
Pipe Joints, 736-1
Tests, 736-2
Notice
Award of, 103-1
to Contractor, 108-1
to Engineer, 104-3, 105-2
to Proceed, 108-1
Notification of Changed Conditions, 110-1
Administrative Process for Dispute Resolution, 110-2
Arbitration, 110-4
Dispute Resolution, 110-1
Dispute Review Board, 110-4
Final Documentation, 110-5
Initial Notification, 110-1
Notify
Inspection Section, 108-1
Survey Section, 105-4, 108-1
Occupational Safety and Health Act, 107-2
Officials, Public
Personal Liability of, 107-6
Open Channels, Earthwork, 215-1
Open Trench, 601-3
Opening Sections to Traffic, 104-3, 108-2
or Equal, Substitutions, 106-2
Overtime
Contractor, 108-2
Paint, 790-1
Painting
Application, 530-1
Surface Preparation, 530-2
Testing, 530-3
Weather Conditions, 530-1
Parkway Grading, 424-1
Partial Payments, 109-5
Partial Use or Occupancy, 105-6
Patented Devices, Materials and Processes, 107-2
Pavement
Asphalt Concrete, 321-1
Decorative, 342-1
Portland Cement Concrete, 324-1
Replacement, 603-2
Sewer Line, 615-4
Pavement Matching and Surfacing Replacement, 336-1
Pavements
Asphalt, 711-1
Exposed Aggregate, 343-1
Geosynthetics, 796-1
Paving Asphalt
Viscosity Grades, 711-1
Paving Asphalts
Temperatures, 711-2
Test Report and Certification, 711-2
Payments
Actual Cost Work, 109-3
Assignments, 109-2
Final, 109-6
for Delay, 109-7
Improvement District Projects, 109-5
Mobilization/Demobilization, 109-7
Partial, 109-5
Scope of, 109-1
Permits, 107-1
Personal Liability of Public Officials, 107-6
Pilot Cars or Flagman, 401-1
Pipe
Cast-in-Place Curing and Backfill, 620-2
Pipe Installation for
Sewer Lines, 615-1
Sprinkler Irrigation System, 440-2
Storm Sewers, 618-1
Subdrainage, 605-1
Water Lines, 610-1
Placement and Construction of Asphalt Concrete Pavement, 321-1
Acceptance, 321-6
Application of Tack Coat, 321-1
Materials and Manufacture, 321-1
Measurement, 321-11
Mix Design, 321-1
Mix Production, 321-2
Placement, 321-3
Quality Control, 321-6
Referee, 321-11
Transportation, 321-3
Weather and Moisture Conditions, 321-1
Placement and Construction of Asphalt Emulsion Slurry Seal Coat, 331-1
Equipment, 331-1
Mixing and Application, 331-2
Preparation of the Surface, 331-1
Protection of Uncured Surface, 331-2
Rolling, 331-2
Weather Limitations, 331-2
Placement and Construction of Asphalt-Rubber Asphalt Concrete, 324-1
Acceptance, 324-5
Application of Tack Coat, 324-2

Materials, 324-1
Mix Production, 324-2
Placement, 324-3
Quality Control, 324-4
Transportation, 324-3
Weather and Moisture Conditions, 324-1
Placement and Construction of Cement Treated Subgrade, 311-1
Construction Methods, 311-1
Equipment, 311-1
Materials, 311-1
Placement and Construction of Hot Asphalt-Rubber Seal, 335-1
Construction, 335-1
Equipment, 335-1
Materials, 335-1
Measurement, 335-2
Mixing, 335-1
Placement of Controlled Low Strength Material, 604-1
Plans
Bidder's Copies, 102-1
Conformity with, 105-2
Contractor's Copies, 105-1
Coordination of, 105-2
Examination of, 102-1
Govern, 102-1
Shop Drawings, 105-1
Planting
and Landscaping, 430-1
Pneumatically Placed Mortar, 525-1
Curing, 525-2
Dry Mix Process, 525-1
Equipment, 525-2
Finishing, 525-2
Forms and Ground Wires, 525-2
Joints, 525-2
Reinforcing Steel, 525-1
Surface Preparation, 525-2
Testing, 525-2
Wet Process, 525-1
Polyethylene Pipe
High Density, 603-1, 738-1
Installation, 603-1
Polyethylene Pipe for Water Distribution, 755-1
Portland Cement Concrete, 725-1
Street Pavement, 324-1
Portland Cement Treated Base, 705-1
Power of Attorney, 103-2
Precast Prestressed Concrete Members, 506-1
Anchorages and Distribution, 506-3
Bonding and Grouting, 506-5
Concrete, 506-1
Enclosures, 506-3
Handling, 506-6
Prestressing, 506-4
Prestressing Steel, 506-2
Samples for Testing, 506-5
Precast Safety Curbs, 410-1
Precoated Chip Seal
Asphalt Grade, 330-1
Construction Methods, 330-1
Temperatures, 330-1, 330-2
Preservative Seal, 334-1, 718-1
Preservative Seal for Asphalt Concrete, 334-1, 718-1
Preservatives
Wood, 779-1
Prime Coat, 756-1
Progress, Commencement, Prosecution, 108-1
Property and Landscape Protection and Restoration, 107-4
Property Marks and Monuments, 107-4
Proposal
Addenda, 102-2
Consideration of, 103-1
Irregular, 102-2
Preparation, 102-1
Public Opening, 102-3
Rejected, 102-2
Revision of, 102-3
Submission of, 102-3
Withdrawal of, 102-3
Proposal Guarantee
Amount, 103-2
Forfeiture of, 103-4
Forteiture of, 102-2
Return of, 103-1
Public
Convenience, 107-2
Property, 107-2
Safety, 107-2
Public Officials
Personal Liability of, 107-6
PVC Sewer Pipe and Fittings, 745-1
Quantities
in Proposal, 102-1
Increase or Decrease, 109-3
Increased, 109-1
Measurement of, 109-1
Payment, 109-2
Reclaimed Water Line Construction, 616-1
Above Ground Pipe, 616-2
Below Ground Pipe, 616-2
Identification, 616-1
Installation, 616-1
Valve and Manhole Covers, 616-3
Valves and Risers, 616-2
Recycling
Hot in-Place, 327-1
Reinforced Concrete Pipe, 735-1
Acceptance Mark, 735-4
Curing of Pipe, 735-2
Curves, Bends and Closures, 735-1
Downgrading of Pipe, 735-4
Manufacturer's Qualifications and Equipment Requirements, 735-2
Materials, 735-1
Quality, 735-1
Sanitary Sewer Pipe, 735-4
Tests and Acceptance, 735-2
Reinforcing Steel, 727-1
Rejected Materials, 106-1
Removal of
Defective Materials, 105-5
Salvage Items, 201-2
Unacceptable Work, 105-5
Unauthorized Work, 105-5
Removal of Existing Improvements, 350-1

Rental Equipment, 109-2
Reports
Archaeological, 107-2
Blasting Survey, 107-4
Extra Work, 109-3
Final Payments, 109-6
Partial Payments, 109-5
Site Conditions, 109-3
Responsibility, Contractor's, 107-5
Retaining Walls, 505-1
Revision of Proposal, 102-3
Right-of-Way
and Traffic Control, 401-1
Railroad, 105-3
Riprap, 703-1
Construction, 220-1
Riprap Construction, 220-1
Rivets, 770-1
Rivets, 770-1
Road-Mixed Surfacing, 320-1
Application of Liquid Asphalt, 320-1
Materials, 320-1
Mixing, 320-1
Prime Coat, 320-1
Spreading Aggregate, 320-1
Spreading and Compaction, 320-2
Roadway Excavation, 205-1
Overshooting, 205-1
Slides and Slipouts, 205-1
Slopes, 205-1
Surplus Material, 205-2
Unsuitable Material, 205-2
Roadway, Failure to Maintain, 105-5
Rolling, Pavements
Chip Seal, 330-2
Temporary, 336-2
Rubber
Asphalt, 717-1
Rubber Gaskets, 735-2, 736-1, 738-1, 745-1
Safety
and Public Convenience, 107-2
Curbs, 410-1
Employees, 107-2
for Workman, 105-1
Health and Sanitation, 107-2
OSHA, 336-1
Public, 107-2
Samples and Tests of Material, 106-1
Sand, 324-1, 333-1, 342-1, 342-2
Sanitary Conditions, 107-2
Sanitary Sewer
Fittings for, 738-1
Saw Cut
Pavement, 336-1
Portland Cement Concrete, 324-6
Schedule, Construction, 108-1
Scope of Work, 104-1
Seal Coats
Fog, 333-1
Sewer Line Construction, 615-1
Air Test, 615-3
Exfiltration Testing, 615-3
Fittings, 615-2
Jointing, 615-2
Laying Pipe, 615-1
Materials, 615-1
Sanitary Sewer Cleanouts, 615-2
Sanitary Sewer Service Taps, 615-2
Separation, 615-1
Testing, 615-2
Trenching, 615-1
Sewer Manholes, 625-1
Sewer Pipe
Fittings for, 745-1
Shop Drawings
Approved by, 105-1
Cost of, 105-1
Furnished by, 105-1
Sidewalk, 340-1
Sidewalk Ramps, 340-1
Signs
Barricades and Warning, 107-3
Blasting Operations, 107-3
Site of Work
Clean up, 104-2
Examination, 102-1
Slurry Seal
Materials, 715-1
Source of Materials and Quality, 106-1
Specifications
Conformity with, 105-2
Coordination with, 105-2
Examination, 102-1
Sprinkler
Irrigation System, 757-1
Irrigation System Installation, 440-1
Stakes, Construction, 105-4
State Inspector of Weights, 109-1
Steel and Aluminum Handrails, 520-1
Steel Pipe, 759-1
Steel Plates for Street Crossings, 601-3
Steel Reinforcement, 727-1
Wire Mesh Reinforcement, 727-1
Wire Reinforcement, 727-1
Wire Ties, 727-1
Steel Structures
Buildings, 515-1
Computed Weights, 515-2
Description, 515-1
Painting, 515-3
Workmanship, 515-2
Stone
Concrete Paving, 342-1
Storage of
Equipment, 106-2
Explosive, 107-4
Materials, 106-2
Paid Materials, 109-6
Storm Drain
Fittings for, 738-1
Storm Drain Construction, 618-1
Construction Methods, 618-1
Jacking Pipe, 618-2
Materials, 618-1
Video Inspection of New Mainline Storm Drains, 618-3
Structural and Rivet Steel, 770-1

INDEX

Structural Plate Pipe
Arches, 761-1
Structure Backfill, 206-1
Structure Excavation and Backfill, 206-1
Foundation Material Treatment, 206-1
Inspection, 206-1
Structure Backfill, 206-1
Structure, Failure to Maintain, 105-5
Structures
Concrete, 505-1
Steel, 515-1
Subconractor's
List of, When Required, 102-2
Subcontractor's
Eligibility and Preference, 102-1
Employment of Labor, 108-1
Insurance, 103-2
Personnel, 108-2
Subcontracts
Approval of, 108-1
Discrimination Clause, 107-1
in Accordance With, 108-1
Liability, 108-1
Subdrainage
Filter Material, 605-1
Pipe, 605-1
Placement, 605-2
Tests, 605-2
Subgrade
Curbs, Driveways, Gutters, Sidewalks, Sidewalk Ramps, 340-1
Grading of Areas Not to Be Paved, 301-2
Preparation, 301-1
Protection of Existing Facilities, 301-2
Relative Compaction, 301-1
Tolerances, 301-1
Substitutions, 106-2
Surety, Power of Attorney, 103-2
Survey
Monuments, 405-1
Section to be Notified, 108-1
Suspend the Work, 104-3, 105-1, 108-2
Tack Coat, 329-1
Equipment, 329-1
Preparation of Surface, 329-1
Protection for Adjacent Property, 329-1
Tapping Sleeves and Valves, 630-1
Air Release and Vacuum Valves, 630-7
Butterfly Valves, 630-5
Gate Valves, 630-1
Telecommunications Installation, 360-1
Cable Installation, 360-1
Cable Locating (Fiber Optic), 360-1
Temperatures
Asphalt Concrete, 711-1
Expansion Joint Filler, 729-2
Geosynthetics, 796-1
Liquid Asphalts, 330-2
Non-Reinforced Concrete Pipe, 736-1
Paving Asphalt, 711-2
Portland Cement Concrete, 324-8
Precoated Chip Seal, 330-1
Prestressed Concrete, 506-2
Temporary Pavement Replacement, 336-2
Termination of Contract, 108-5
Testing
ABS Trust Pipe and Fittings, 744-2
Asbestos-Cement Pipe, 737-2, 752-1
Asphalt Pavement Core Bonding Material, 708-1
Cast-in-Place Concrete Pipe, 620-3
Concrete Block Masonry, 776-2
Controlled Low Strength Material, 604-2
Dust Palliative Performance, 792-3
Final Flushing Water Mains, 611-3
Galvanized Materials, 771-1
Geosynthetic, 796-3
Gray Iron Castings, 787-1
Lining for Concrete Pipe, 741-3
Liquid Asphalt, 712-1
Microsurfacing Specifications, 331-2
Non-Reinforced Concrete Pipe, 736-2
Painting, 530-3
Pavement Asphalts, 711-1
Pneumatically Placed Mortar, 525-2
Polyethylene Pipe, 755-1
Precast Prestressed Concrete, 506-5
Reinforced Concrete Pipe, 735-2
Sewer Lines, 615-2
Sprinkler Irrigation System, 440-4
Vitrified Clay Pipe, 743-1
Water Lines, 610-8
Water Taps and Meter Service Connections, 631-2
Tests
Earthwork for Open Channels, 215-2
Fill Construction, 211-2
Fog Seal Coats, 333-1
Holes, 601-1, 601-6, 603-2
Samples of Materials, 106-1
Subdrainage System, 605-2
Topsoils, 425-2, 795-1
Trade Names and Substitutions, 106-2
Traffic
Barricade Manual, 401-1
Control, 401-1
Control Devices, 401-1
Control Measures, 401-1
Flagmen or Pilot Cars, 401-1
General Traffic Regulations, 401-1
Maintenance, 430-2
Tree and Shrub Planting, 430-2
Trench Excavation, Backfilling and Compaction, 601-1
Contractor Certification of Installation Procedures, 601-6
Density Determination, 601-5
Excavation, 601-1
Fittings for, 602-2
Foundation, Bedding, Backfilling and Compaction, 601-4
Open Trench, 601-3
Pavement Replacement, 601-7
Protection of Existing Utilities, 601-3
Surface Restoration, 601-7
Trench Widths, 601-1
Truss Pipe, 744-1
Tunneled Steel Liner Plate, 602-1
Tunneling Operations, 602-2
Types of Pavement Replacement, 336-1
Unacceptable

Materials, 106-3
Work, 105-5
Uniformed Off-Duty Law Enforcement Officer, 401-1
Untreated Base, 310-1
Deficiency, 310-1
Use or Occupy, 105-6
Utilities
Cooperation with, 105-3
Moved by the Owners, 105-3
Notify Before Blasting, 107-4
Protection of, 107-4
Utility Potholes Keyhold Method, 355-1
Backfill and Compaction, 355-1
Deficiencies, 355-1
Excavation, 355-1
Pavement Restoration, 355-1
Surface Tolerances, 355-1
Valves
Air Release and Vacuum, 630-7
Butterfly, 630-5
Gate, 630-1
Tapping, 630-2
Vitrified Clay Pipe, 743-1
Wage Rates, 107-1
Waiver of Legal Rights, 107-6
Warranties, 108-3
Water Line Construction, 610-1
Blocking, 610-8
Cleanup, 610-9
Connection to Existing Mains, 610-5
Construction Methods, 610-1
Couplings, Joints, Gaskets and Flanges, 610-6
Disinfecting, 610-9
Fire Hydrants, 610-5
Fire Line Service Connections, 610-6
Manholes and Vaults, 610-5
Materials, 610-1
Meter Service Connections, 610-6
Polyethylene Corrosion Protection, 610-3
Separation, 610-2
Testing, 610-8
Valve Boxes, 630-1
Valves, 610-5
Water Taps and Meter Service Connections, 631-1
Weather
Asphalt Chip Seal Coat, 330-1
Concrete Structures, 505-7
Dust Palliative, 230-3
Fog Seal Coat, 333-1
Microsurfacing Specifications, 331-4
Painting, 530-1
Weighmaster's Certificate, 109-1
Wire Reinforcement, 727-1
Withholding Assignments, 109-2
Wood Preservatives, 779-1
Field Treatment of Cut Surfaces, 779-1
Oil Type Preservative Treatment, 779-1
Water Borne Salt Preservatives Treatment, 779-1
Work
Acceptance, 105-5
Actual Cost, 109-3
Alteration of, 104-2
Compensation for Alteration, 109-2
Contractor's Responsibility, 107-5
Control of, 105-1
Extra, 104-3
Hours, 109-5
Inspection of, 105-5
Overtime, 108-2
Rejected, 106-2
Scope of, 104-1
Suspension of, 104-2, 107-5
to be Done, 104-1
Unacceptable, 105-5
Unauthorized, 105-5
Weekend or Holiday, 108-2, 108-3
Workmen
Character of, 108-2
Compensation Insurance, 103-3
Safety, 105-1

UNIFORM STANDARD DETAILS for PUBLIC WORKS CONSTRUCTION

SPONSORED and DISTRIBUTED by the

MARICOPA ASSOCIATION of GOVERNMENTS

2012 EDITION

ARIZONA

(Includes 2013 revisions)

100 SERIES: GENERAL INFORMATION

Detail	Revised	Title
101	2011	GENERAL INFORMATION
110-1	2011	PLAN SYMBOLS (SYMBOLS)
110-2	2011	PLAN SYMBOLS (LINE TYPES)
112	1998	DIMENSIONING FOR ROAD IMPROVEMENT PLANS
120-1	2001	SURVEY MARKER
120-2	2007	SURVEY MARKER - FOR UNINCORPORATED AREAS OF THE COUNTY
122	2011	PAVEMENT MARKER FOR FIRE HYDRANTS
130	2003	BARRICADES
131	1998	STREET SIGN BASE
140	2009	BOLLARD
141	2009	HAZARD MARKER
145	2011	SAFETY RAIL
150	1998	PRECAST SAFETY CURB
160	2013 *	6' CHAIN LINK FENCE AND GATE

200 SERIES: STREET INFORMATION

Detail	Revised	Title
200-1	2010	BACKFILL, PAVEMENT AND SURFACE REPLACEMENT
200-2	2010	BACKFILL, PAVEMENT AND SURFACE REPLACEMENT
201	2013 *	PAVEMENT SECTION AT TERMINATION
202	1998	ALLEY DETAILS (PAVED AND UNPAVED)
203	1998	SCUPPERS
204	1998	EQUIPMENT CROSSING
205	2006	PAVED TURNOUTS
206-1	2007	CONCRETE SCUPPER
206-2	2007	CONCRETE SCUPPER
206-3	2007	CONCRETE SCUPPER (ISOMETRIC VIEW)
210	2012	RESIDENTIAL SPEED HUMP
211	1998	STANDARD TRENCH PLATING DETAIL
212	2012	UTILITY POTHOLE REPAIR
220-1	2007	CURB AND GUTTER TYPES A, B, C AND D
220-2	2007	CURB AND GUTTER TYPES E AND E
221	2011	CURB AND GUTTER TRANSITION TYPE A TO TYPE C, INTEGRAL ROLL CURB, GUTTER AND SIDEWALK
222	2008	SINGLE CURB - TYPES A, B AND TERMINATION
223	1998	MEDIAN NOSE TRANSITION
224	1998	JOINT FOR DRAINAGE INLETS AND MANHOLE COVERS
225	2005	CONCRETE PAVERS
230	2011	SIDEWALKS
234	2012	CURB MODIFICATION AT DETECTABLE WARNING
235-1	2012	CURB RAMPS (TYPE A)
235-2	2012	CURB RAMPS (TYPE B)
235-3	2012	CURB RAMPS (TYPE C)
235-4	2011	CURB RAMPS (TYPE D)
235-5	2011	CURB RAMPS (TYPE E)

200 SERIES: STREET INFORMATION (CONTINUED)

Detail	Revised	Title
240	2010	VALLEY GUTTER
250-1	2009	DRIVEWAY ENTRANCES WITH DETACHED SIDEWALK
250-2	2013 *	DRIVEWAY ENTRANCES WITH SIDEWALK ATTACHED TO CURB
251	2003	RETURN TYPE DRIVEWAYS
252	2005	BUS BAYS
260	2013 *	ALLEY ENTRANCE (WITH VERTICAL CURB AND GUTTER)
262	2012	WING TYPE ALLEY ENTRANCE (WITH COMBINED CURB AND GUTTER)
263	2002	WING TYPE ALLEY ENTRANCE (WITH ROLL TYPE CURB AND GUTTER)
270	2001	FRAME AND COVER (AND GRADE ADJUSTMENTS)

300 SERIES: WATER INFORMATION

Detail	Revised	Title
301	1998	BLOCKING FOR WATER GATE AND BUTTERFLY VALVES
302-1	1998	JOINT RESTRAINT WITH TIE RODS (DRAWING)
302-2	1998	JOINT RESTRAINT WITH TIE RODS (NOTES)
303-1	1998	JOINT RESTRAINT FOR DUCTILE IRON AND POLYETHYLENE WRAPPED DUCTILE IRON WATER PIPES (DRAWING)
303-2	1998	JOINT RESTRAINT FOR DUCTILE IRON AND POLYETHYLENE WRAPPED DUCTILE IRON WATER PIPES (TABLES)
310	1998	CAST IRON WATER METER BOX COVER NO. 1
311	1998	CAST IRON WATER METER BOX COVER NO. 2
312	1998	CAST IRON WATER METER BOX COVER NO. 3
313	1998	CAST IRON WATER METER BOX COVER NO. 4
314	1998	CAST IRON WATER METER BOX COVER NO. 5
320	1998	CONCRETE WATER METER BOXES
321	1998	STANDARD WATER METER VAULT
340	2002	INSTALLING TAPPING SLEEVES AND VALVES
342	1998	CONCRETE PRESSURE PIPE TAPPING SLEEVE
345-1	1998	3", 4", 6" WATER METER
345-2	1998	4", 6" WATER METER WITH ON-SITE HYDRANTS
346	1998	FIRE LINE DETECTOR CHECK VAULT
360-1	2013 *	DRY BARREL FIRE HYDRANT INSTALLATION
360-2	2013 *	WET BARREL FIRE HYDRANT INSTALLATION
360-3	2013 *	FIRE HYDRANT INSTALLATION DETAILS
362	1999	LOCATIONS FOR NEW FIRE HYDRANTS
370	1998	VERTICAL REALIGNMENT OF WATER MAINS
380	1998	THRUST BLOCKS FOR WATER LINES
381	1998	ANCHOR BLOCKS FOR VERTICAL BENDS
389	2001	CURB STOP WITH VALVE BOX AND COVER
390	1998	CURB STOP WITH FLUSHING PIPE
391-1	2001	VALVE BOX INSTALLATION AND GRADE ADJUSTMENT
391-2	2001	VALVE BOX INSTALLATION AND GRADE ADJUSTMENT
392	2001	DEBRIS CAP INSTALLATION

* NEWLY REVISED.

400 SERIES: SEWER INFORMATION

Detail	Revised	Title
403-1	1998	PIPE SUPPORT ACROSS TRENCHES
403-2	1998	PIPE SUPPORT ACROSS TRENCHES
403-3	1998	ALTERNATIVE TO PIPE SUPPORT
404-1	2006	WATER AND SANITARY SEWER SEPARATION/PROTECTION
404-2	2006	WATER AND SANITARY SEWER SEPARATION/PROTECTION
404-3	2006	WATER AND SANITARY SEWER SEPARATION/PROTECTION
405	1998	BROKEN SEWER LINE REPLACEMENT
420-1	2004	PRE-CAST CONCRETE SEWER MANHOLE
420-2	2001	PRE-CAST CONCRETE SEWER MANHOLE
421	2012	OFFSET MANHOLE 8” TO 30” PIPE
422	2012	BRICK SEWER MANHOLE AND COVER FRAME ADJUSTMENT
423-1	2012	24” CAST IRON MANHOLE FRAME AND COVER
423-2	2012	30” CAST IRON MANHOLE FRAME AND COVER
424-1	2012	24” CAST IRON WATERTIGHT MANHOLE FRAME AND COVER
424-2	2012	30” CAST IRON WATERTIGHT MANHOLE FRAME AND COVER
425	1998	24” ALUMINUM MANHOLE FRAME AND COVER
426	2007	DROP SEWER CONNECTIONS
427	1998	STUB OUT AND PLUGS
428	1998	MANHOLE STEPS
429	1998	INDUSTRIAL WASTE CONTROL VAULT WITH MANHOLE
440-1	2007	TYPE ‘A’ SEWER BUILDING CONNECTION - ELECTRONIC BALL MARKERS (STANDARD)
440-2	2007	TYPE ‘B’ SEWER BUILDING CONNECTION - TWO-WAY CLEANOUT AND METER BOX AT R/W
440-3	2007	TYPE ‘C’ SEWER BUILDING CONNECTION - ONE-WAY CLEANOUT AND METER BOX
440-4	2006	SEWER SERVICE CURB CROSSING STAMP DETAIL
441	2001	SEWER CLEANOUT

500 SERIES: IRRIGATION AND STORM DRAIN INFORMATION

Detail	Revised	Title
501-1	2012	HEADWALL
501-2	2012	HEADWALL
501-3	1998	HEADWALL 42” TO 84” PIPE
501-4	1998	HEADWALL IRRIGATION 18” TO 60” PIPE
501-5	1998	HEADWALL DROP INLET
502-1	1998	TRASH RACK
502-2	2004	TRASH RACK
503	1998	IRRIGATION STANDPIPE
504	1998	CONCRETE BLOCK JUNCTION BOX
505	1998	CONCRETE PIPE COLLAR
506	1998	IRRIGATION VALVE INSTALLATION
507	1998	ENCASED CONCRETE PIPE (FOR SHALLOW INSTALLATION)
510	1998	CORRUGATED METAL PIPE AND INSTALLATION

500 SERIES: IRRIGATION AND STORM DRAIN INFORMATION (CONTINUED)

Detail	Revised	Title
520	1998	STORM DRAIN MANHOLE BASE (48” AND SMALLER)
521	1998	STORM DRAIN MANHOLE BASE (51” OR LARGER)
522	1998	STORM DRAIN MANHOLE SHAFT
523-1	1998	PRESSURE MANHOLE
523-2	1998	PRESSURE MANHOLE
524	1998	STORM DRAIN LATERAL PIPE CONNECTIONS
530	1998	3’-6” CURB OPENING CATCH BASIN - TYPE ‘A’
531	1998	5’-6” CURB OPENING CATCH BASIN - TYPE ‘B’
532	1998	8’-0” CURB OPENING CATCH BASIN - TYPE ‘C’
533-1	1998	CATCH BASIN TYPE ‘D’
533-2	1999	APRON FOR TYPE ‘D’ CATCH BASIN
533-3	2007	FRAME AND GRATE FOR TYPE ‘D’ CATCH BASIN
533-4	2007	7’-0” CURB OPENING CATCH BASIN TYPE ‘D’ - GRATE DETAILS
534-1	1998	CATCH BASIN TYPE ‘E’
534-2	1998	CATCH BASIN TYPE ‘E’ (DETAILS)
534-3	1998	CATCH BASIN TYPE ‘E’ (DETAILS)
534-4	1998	CATCH BASIN TYPE ‘E’ (DETAILS)
534-5	1998	ALTERNATE GRATE STYLES, SUMP LOCATION
535	2009	CATCH BASIN TYPE ‘F’ (FOR USE WITHOUT CURB)
536-1	1999	COMMON DETAILS AND SECTIONS FOR CURB OPENING CATCH BASINS
536-2	1998	ALTERNATIVE COVER FOR CURB OPENING CATCH BASINS
537	2002	CATCH BASIN TYPE ‘G’
538	1998	CATCH BASIN TYPE ‘H’
539	1998	GRATES FOR CATCH BASINS, TYPE G AND H
540-1	1998	CATCH BASIN GRATES
540-2	1998	CATCH BASIN GRATES
541	2005	CATCH BASIN SUBGRADE DRAIN
545	1998	END SECTION - REINFORCED CONCRETE PIPE
550	1998	SPILLWAY INLET AND OUTLET
552	2009	CONCRETE CUT-OFF WALLS
555	2010	EROSION PROTECTION/

* NEWLY REVISED.

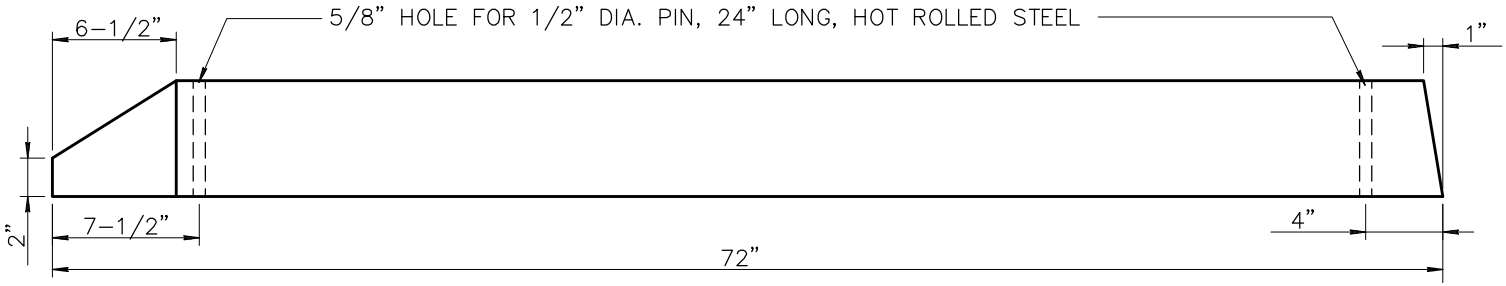

TYPE A

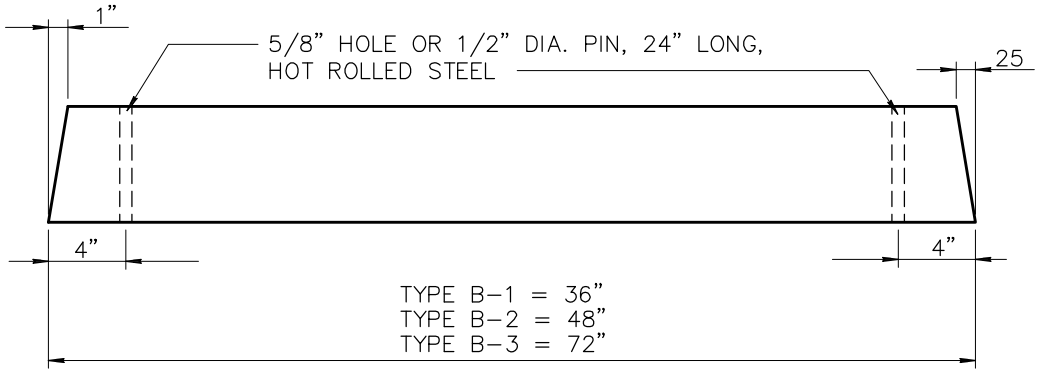

TYPE B-1, B-2, AND B-3

NOTES:

1. DIMENSIONAL AND REINFORCEMENT CHANGES WILL BE PERMITTED UPON PRIOR WRITTEN APPROVAL OF THE ENGINEER.
2. UNLESS OTHERWISE NOTED, CONCRETE SHALL BE CLASS 'A' PER SECTION 725.

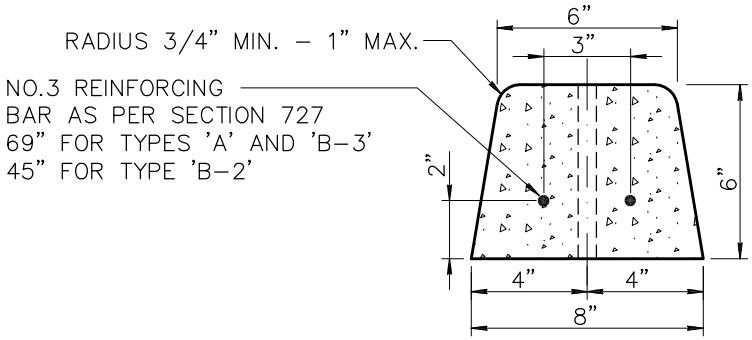

TYPICAL SECTION

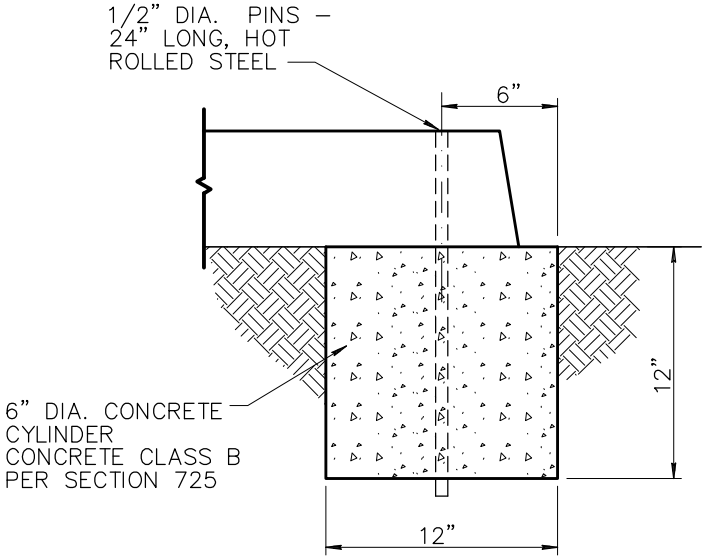

SAFETY CURB INSTALLATION ON DIRT

DETAIL NO.				REVISED	DETAIL NO.
150	MARICOPA ASSOCIATION of GOVERNMENTS	STANDARD DETAIL ENGLISH	PRECAST SAFETY CURB	01-01-1998	150

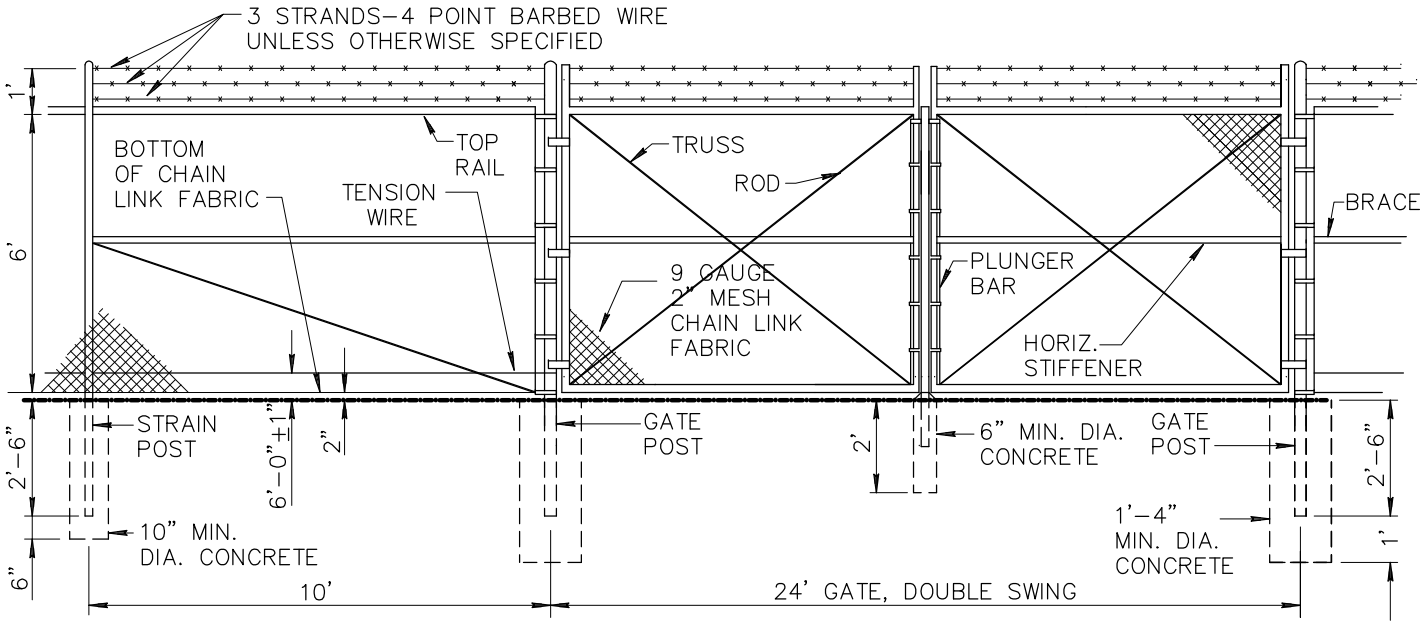

NOTES

1. ALL CONCRETE SHALL BE CLASS 'C' PER SECT. 725.
2. FITTINGS NOT SPECIFICALLY DETAILED SHALL BE HEAVY DUTY DESIGN.
3. STRAIN POSTS SHALL BE SPACED AT 500' MAXIMUM SPACING.
4. BOTH CORNER AND STRAIN POSTS SHALL HAVE STRAIN PANELS.
5. ALL POSTS SHALL BE CAPPED.
6. MEMBER SIZES SHALL BE THE FOLLOWING:

MEMBER	AISC SIZE	OUTSIDE DIA.
CORNER POST	2–1/2"	2.875"
LINE POST	1–1/2"	1.900"
STRAIN POST	1–1/2"	1.900"
BRACE	1–1/4"	1.666"
STRETCH BAR	3/16"x3/4" FLAT	3/16"x3/4" FLAT
GATE POST	3–1/2"	4.000"
TOP RAIL	1–1/4"	1.666"

7. CONSTRUCTION AND MATERIALS SHALL CONFORM TO SECT. 420 AND 772, RESPECTIVELY. SEE TABLE 772–1 FOR WEIGHTS OF MEMBERS.

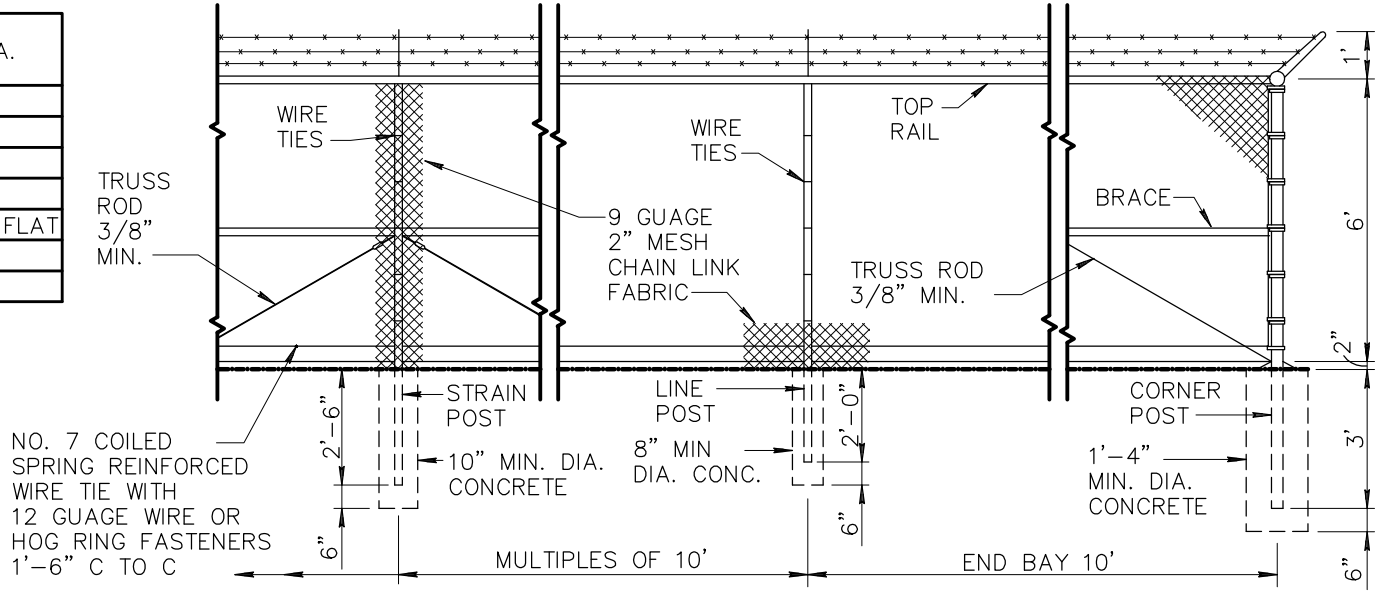

DETAIL NO.				REVISED	DETAIL NO.
160	MARICOPA ASSOCIATION of GOVERNMENTS	STANDARD DETAIL ENGLISH	6' CHAIN LINK FENCE AND GATE	01–01–2013	160

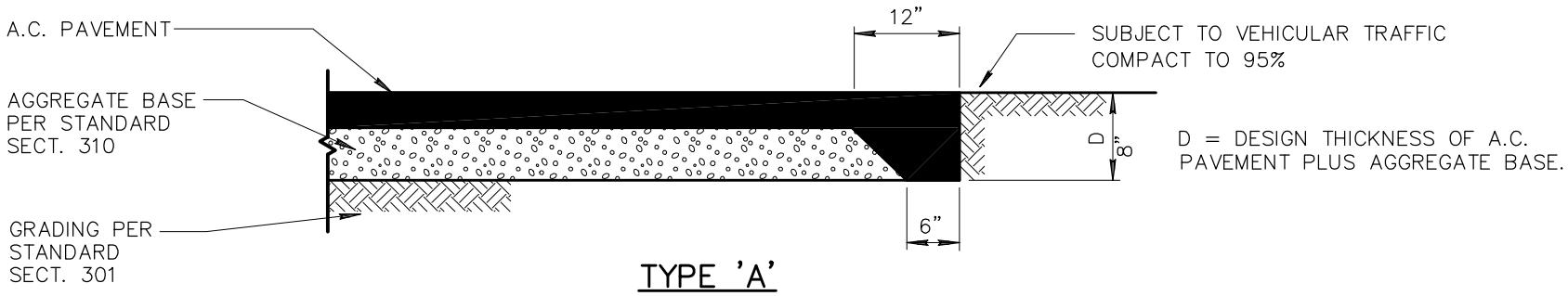

TYPE 'A'

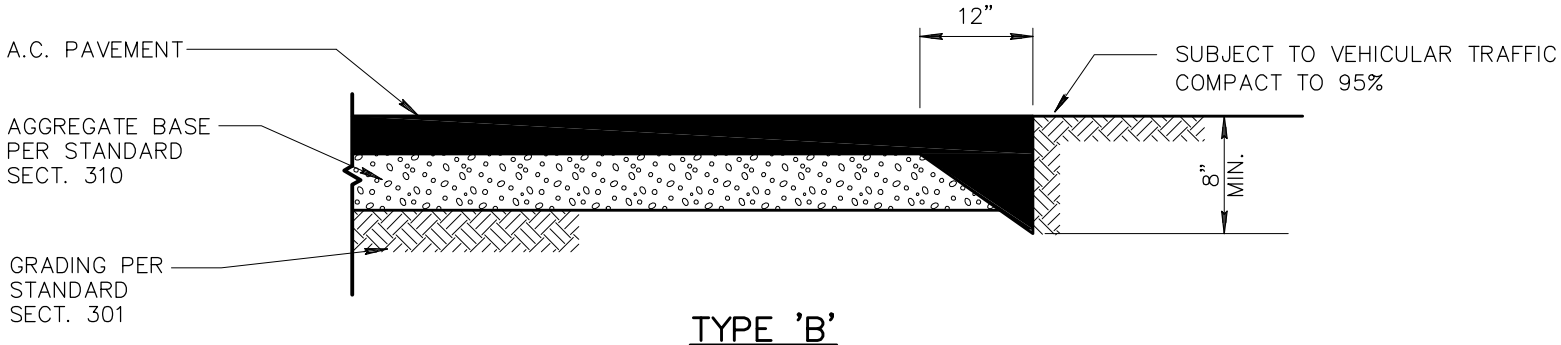

TYPE 'B'

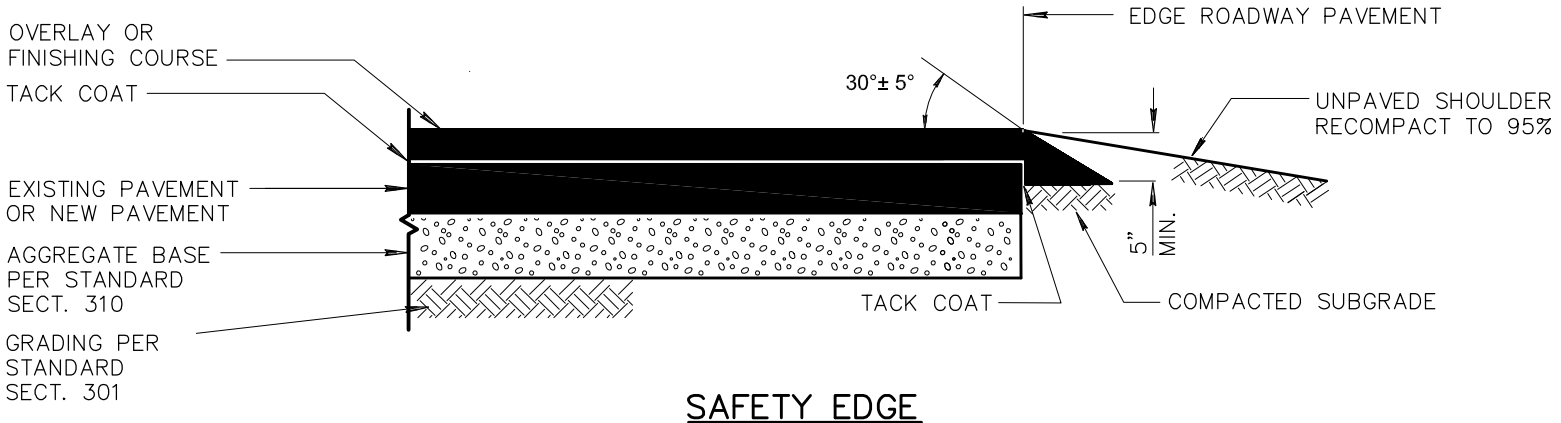

SAFETY EDGE

DETAIL NO.				DATE	DETAIL NO.
201	MARICOPA ASSOCIATION of GOVERNMENTS	STANDARD DETAIL ENGLISH	ASPHALT PAVEMENT EDGE DETAILS	01-01-2013	201

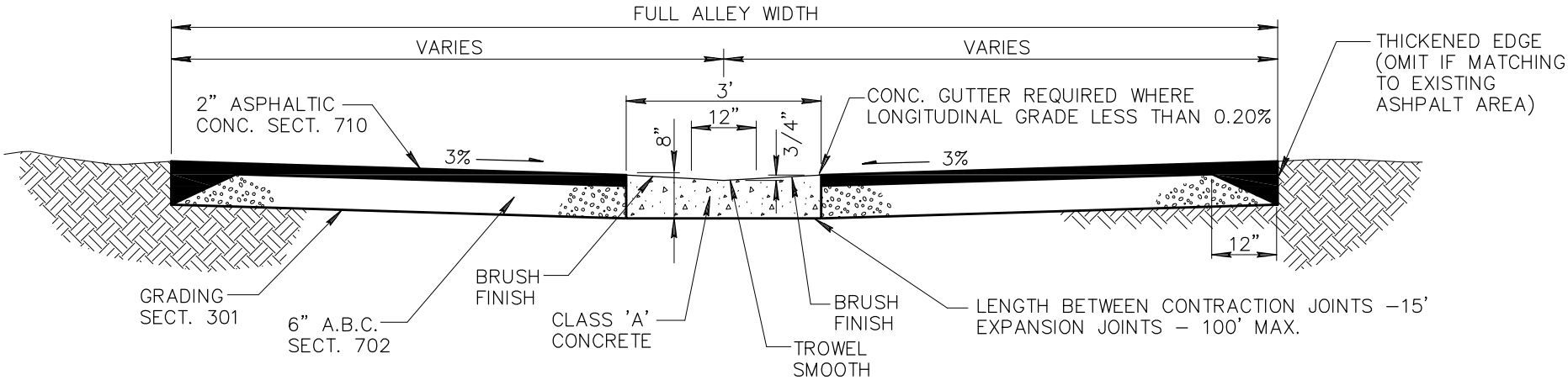

PAVED ALLEY DETAIL

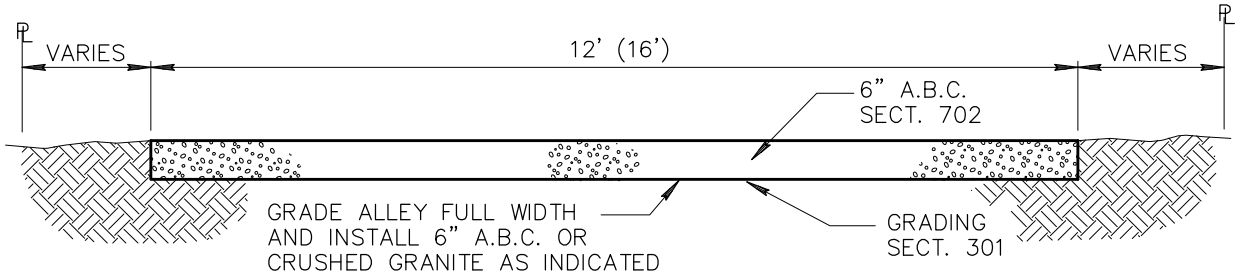

UNPAVED ALLEY DETAIL

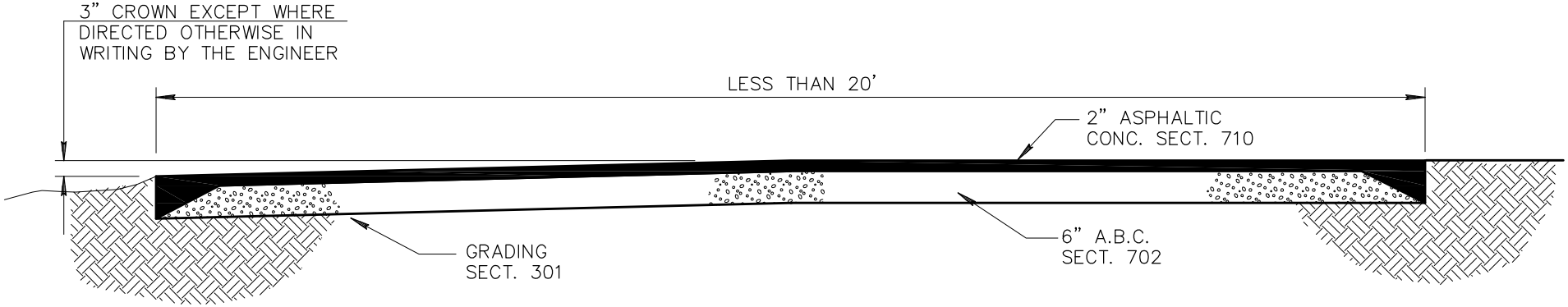

RESIDENTIAL ALLEY DETAIL

DETAIL NO.				REVISED	DETAIL NO.
202	MARICOPA ASSOCIATION of GOVERNMENTS	STANDARD DETAIL ENGLISH	ALLEY DETAILS (PAVED AND UNPAVED)	01–01–1998	202

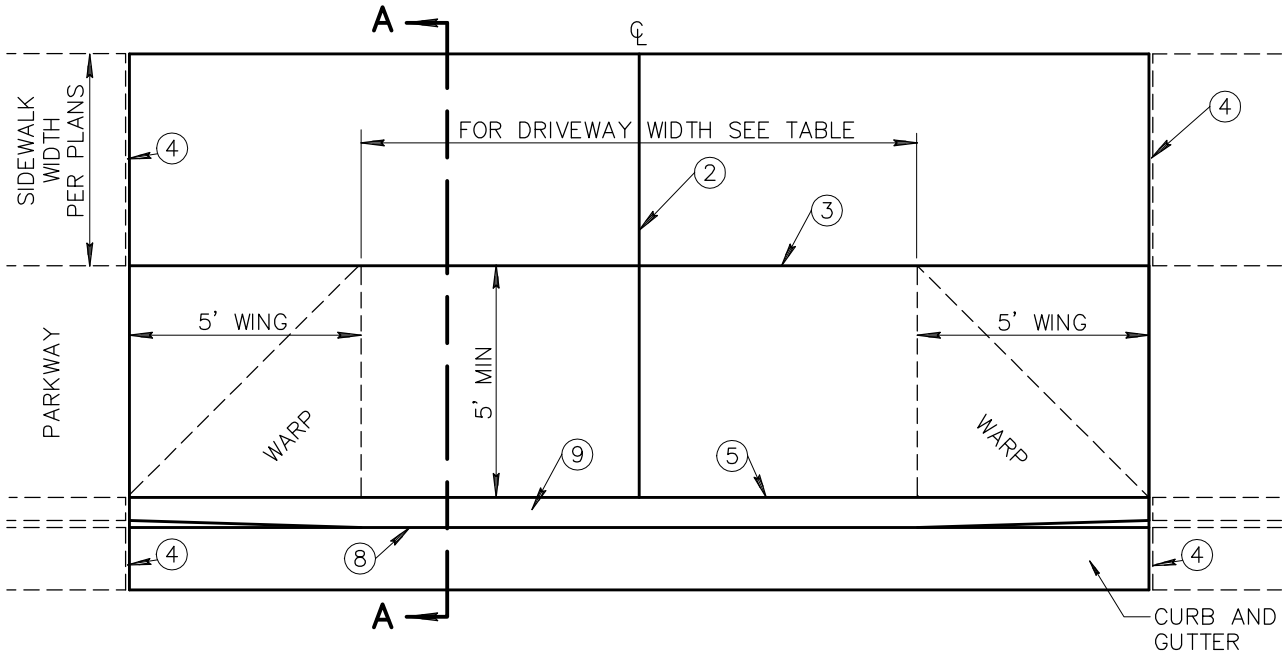

DRIVEWAY WITH DETACHED SIDEWALK

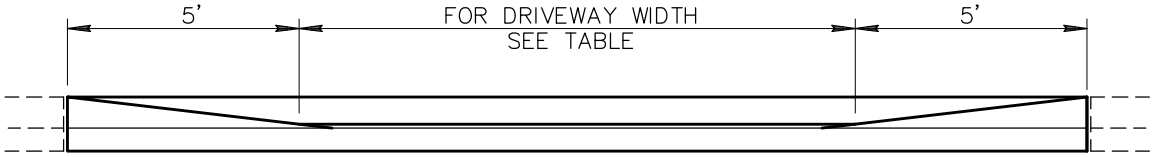

NOTES:

1. DEPRESSED CURB SHALL BE PAID FOR AT THE UNIT PRICE BID FOR THE TYPE OF CURB USED AT THAT LOCATION.
2. CONTRACTION JOINT ON D/W CENTERLINE.
3. CONTRACTION JOINT.
4. 1/2–INCH EXPANSION JOINTS SHALL COMPLY WITH SECTION 340.
5. BACK OF CURB – CONSTRUCTION JOINT.
6. CONCRETE CLASS AS NOTED IN TABLE. CONCRETE PER SECTION 725.
7. SUBGRADE PREPARATION, SECT. 301.
8. FLOW LINE OF GUTTER.
9. DEPRESSED CURB.
10. SECT. A–A AND ELEVATION: D/W SHOWN WITH VERTICAL CURB AND GUTTER, ROLL TYPE CURB AND GUTTER TREATED SIMILARLY.
11. ROUGH BROOM FINISH FULL WIDTH OF RAMP AND WINGS. TROWEL AND USE LIGHT HAIR BROOM FINISH FOR WALKWAY AREA.

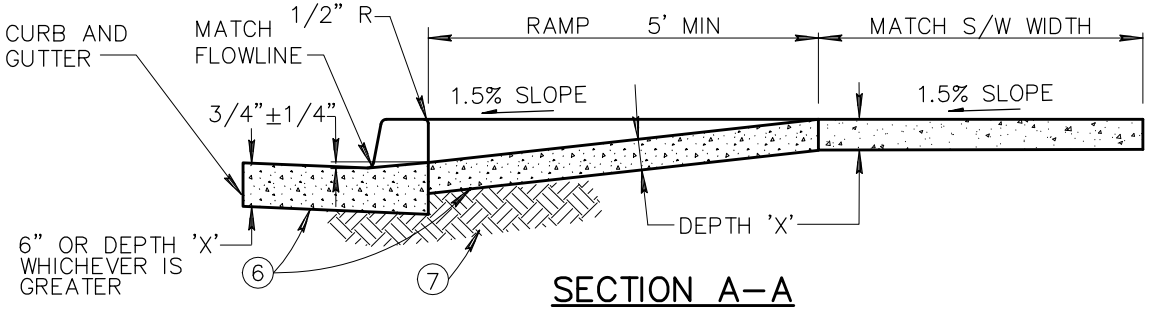

SECTION A–A

COMMERCIAL AND INDUSTRIAL				
DRIVEWAY WIDTH	MIN.	MAX.	CLASS	DEPTH 'X'
COMMERCIAL	✳ 16'	40'	A	9"
INDUSTRIAL	✳ 16'	40'	A	9"
✳24' MIN. FOR TWO WAY TRAFFIC				

RESIDENTIAL				
DRIVEWAY WIDTH	MIN.	MAX.	CLASS	DEPTH 'X'
MAJOR STREET	16'	30'	B	5"
COLLECTOR STREET	✳ 12'	30'	B	5"
LOCAL STREET	12'	30'	B	5"
✳16' DESIRABLE				

DETAIL NO.				REVISED	DETAIL NO.
250–1	MARICOPA ASSOCIATION of GOVERNMENTS	STANDARD DETAIL ENGLISH	DRIVEWAY ENTRANCES WITH DETACHED SIDEWALK	01–01–2009	250–1

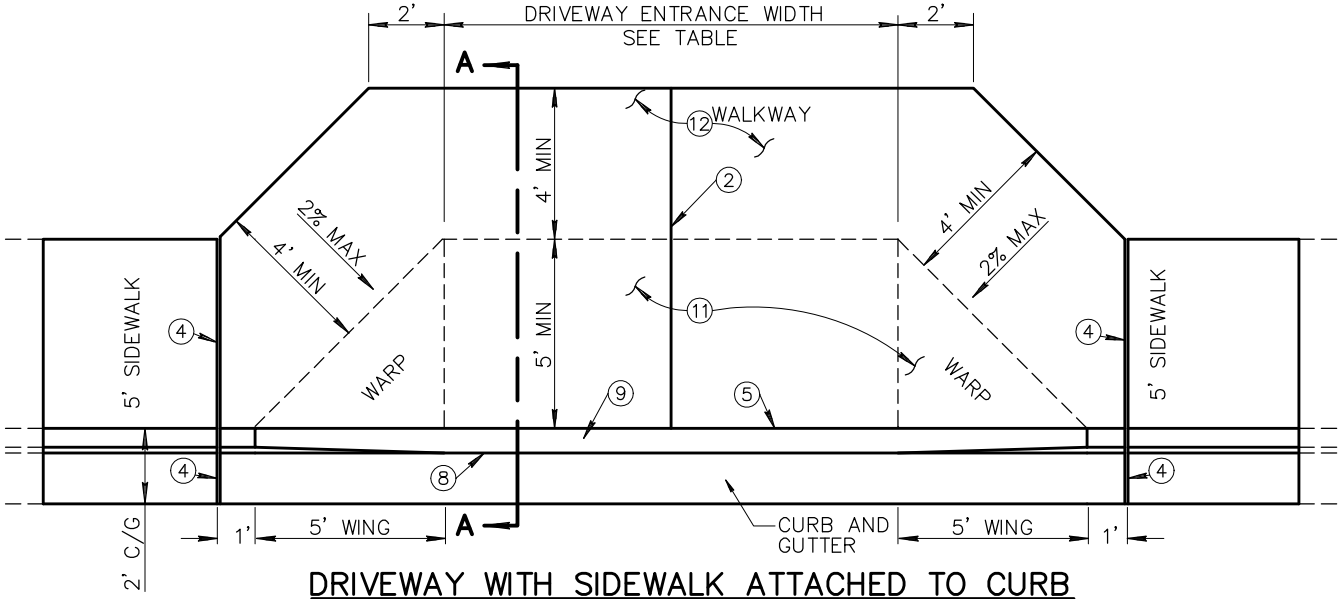

DRIVEWAY WITH SIDEWALK ATTACHED TO CURB

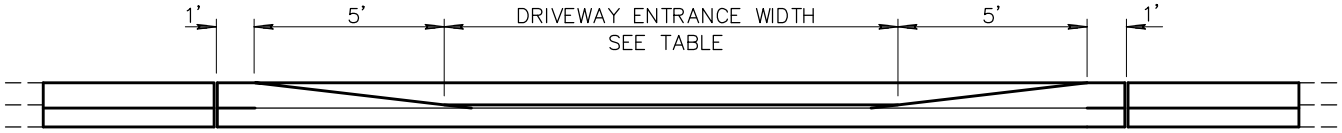

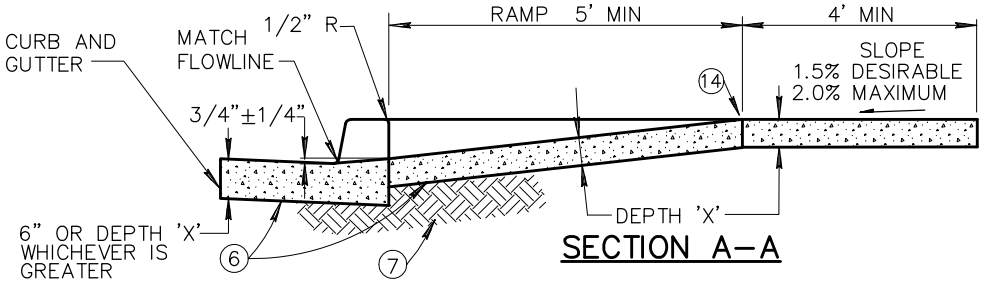

SECTION A–A

NOTES:

1. DEPRESSED CURB SHALL BE PAID FOR AT THE CONTRACT UNIT PRICE FOR THE TYPE OF CURB USED AT THAT LOCATION.
2. CONTRACTION JOINT(S) FOR DRIVEWAY ENTRANCE: WIDTH LESS THAN 22' NONE REQUIRED; WIDTH GREATER THAN 22' AND LESS THAN 30' LOCATE SINGLE JOINT ON D/W CENTERLINE; WIDTH OF 30' OR GREATER LOCATE TWO JOINTS TO EQUALLY DIVIDE THE DRIVEWAY ENTRANCE WIDTH.
3. DETAIL GEOMETRICS ARE BASED ON A CURB HEIGHT OF SIX INCHES (6"), AN ATTACHED SIDEWALK WIDTH OF FIVE FEET (5'), AND A DRIVEWAY RAMP LENGTH NOT EXCEEDING SIX FEET (6'). GEOMETRIC MODIFICATIONS MAY BE REQUIRED WHEN CONDITIONS ARE MODIFIED.
4. 1/2–INCH EXPANSION JOINTS SHALL COMPLY WITH SECTION 340.
5. BACK OF CURB – CONSTRUCTION JOINT.
6. CONCRETE CLASS AS NOTED IN TABLE. CONCRETE PER SECTION 725.
7. SUBGRADE PREPARATION, SECT. 301.
8. FLOW LINE OF GUTTER.
9. DEPRESSED CURB.
10. SECT. A–A AND ELEVATION: D/W SHOWN WITH VERTICAL CURB AND GUTTER, ROLL TYPE CURB AND GUTTER TREATED SIMILARLY.
11. ROUGH BROOM FINISH FULL WIDTH OF RAMP AND WINGS.
12. TROWEL AND USE LIGHT HAIR BROOM FINISH FOR WALKWAY AREA.
13. 'DRIVEWAY ENTRANCE WIDTH' IS THE DRIVEWAY WIDTH PLUS ADDITIONAL WIDENING REQUIRED BY THE LOCAL JURISDICTION.
14. ELEVATION AT TOP OF DRIVEWAY RAMP SHALL BE EQUAL TO OR HIGHER THAN NORMAL CURB ELEVATION.

COMMERCIAL AND INDUSTRIAL				
DRIVEWAY ENTRANCE WIDTH	MIN.	MAX.	CLASS	DEPTH 'X'
COMMERCIAL	✳ 16'	40'	A	9"
INDUSTRIAL	✳ 16'	40'	A	9"
✳24' MIN. FOR TWO WAY TRAFFIC				

RESIDENTIAL				
DRIVEWAY ENTRANCE WIDTH	MIN.	MAX.	CLASS	DEPTH 'X'
MAJOR STREET	16'	30'	B	5"
COLLECTOR STREET	✳ 12'	30'	B	5"
LOCAL STREET	12'	30'	B	5"
✳16' DESIRABLE				

DETAIL NO.				REVISED	DETAIL NO.
250–2	MARICOPA ASSOCIATION of GOVERNMENTS	STANDARD DETAIL ENGLISH	DRIVEWAY ENTRANCES WITH SIDEWALK ATTACHED TO CURB	01–01–2013	250–2

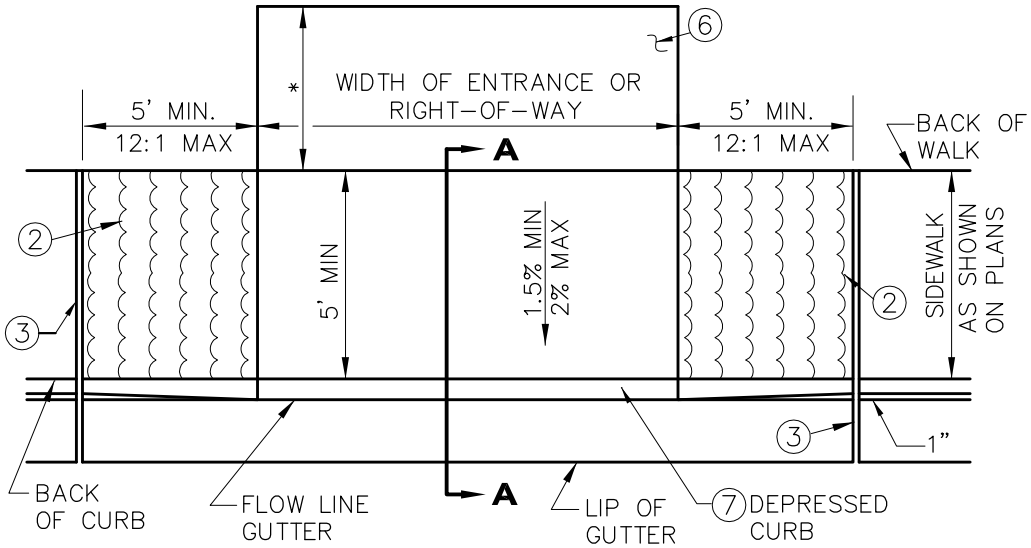

TYPE A - WITHOUT RETAINING CURB

*SEE PLANS FOR ALLEY SURFACING REQUIREMENTS

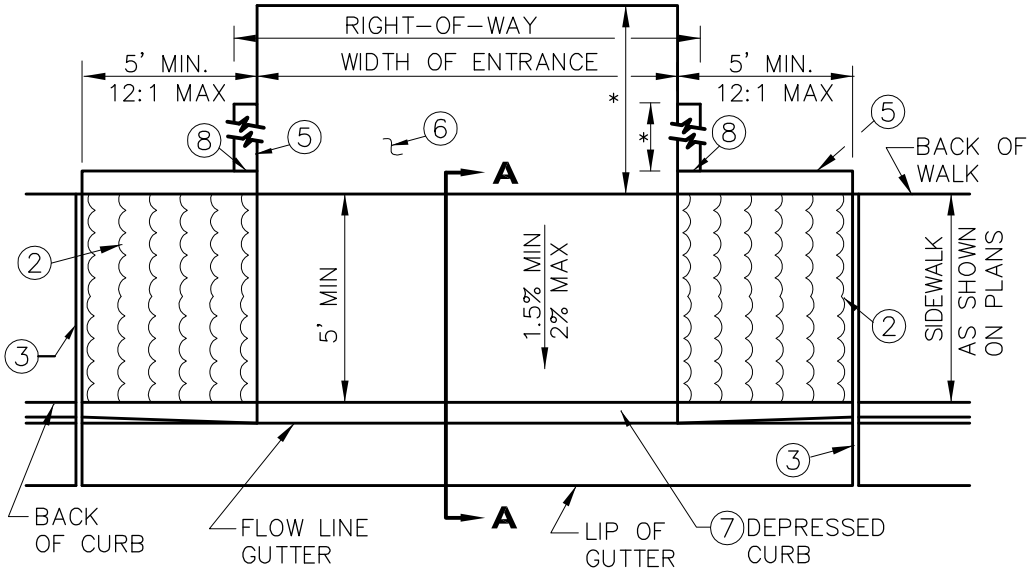

TYPE B - WITH RETAINING CURB

* SEE PLANS FOR RETAINING CURB LENGTHS,
TOP OF CURB ELEVATIONS, AND ALLEY SURFACING REQUIREMENTS

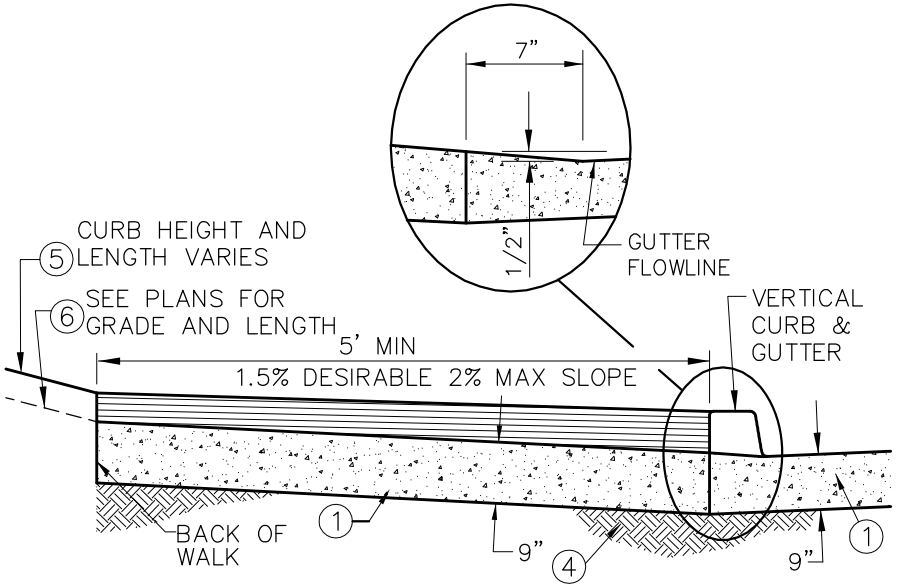

SECTION A-A

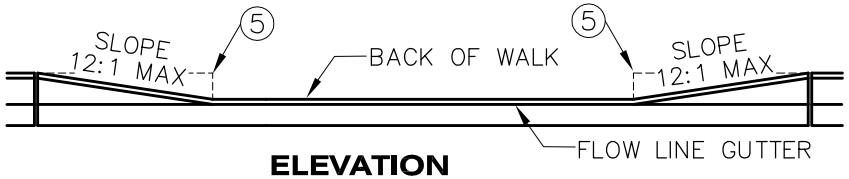

ELEVATION

NOTES:

1. CLASS "A" CONCRETE PER SECTION 725.
2. LIMITS OF HEAVY ROUGH BROOM FINISH.
3. EXPANSION JOINTS PER SECTION 340.
4. SUBGRADE PREPARATION PER SECTION 301.
5. SINGLE CURB PER DETAIL 222, TYPE "B".
6. ALLEY SURFACING PER PLANS.
7. DEPRESSED CURB SHALL BE PAID FOR AT THE CONTRACT UNIT PRICE FOR THE TYPE OF CURB USED AT THAT LOCATION.
8. CONTROL JOINT.

DETAIL NO.				REVISED	DETAIL NO.
260	MARICOPA ASSOCIATION of GOVERNMENTS	STANDARD DETAIL ENGLISH	ALLEY ENTRANCE (WITH VERTICAL CURB AND GUTTER)	01-01-2013	260

This Page Is Reserved for Future Use.

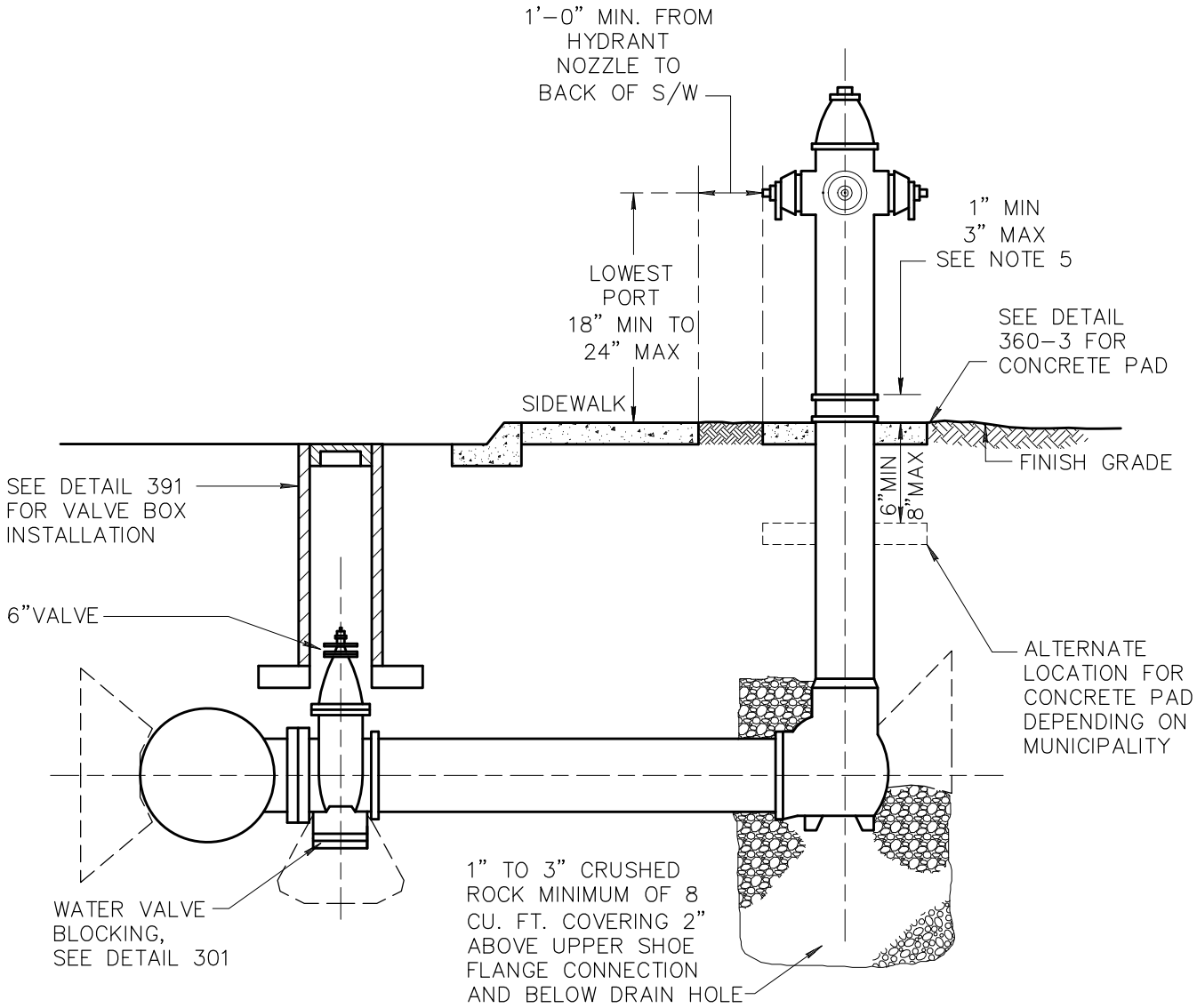

NOTES:

1. JOINTS BETWEEN THE VALVE AND THE MAIN SHALL BE FLANGED TYPE. JOINTS BETWEEN THE VALVE AND HYDRANT SHALL BE RESTRAINT OR MECHANICAL TYPE.
2. RESTRAINTS SHALL BE MECHANICAL RESTRAINT OR THRUST BLOCK PER DETAIL 380.
3. A FLANGE JOINT BY MECHANICAL JOINT VALVE SHALL BE USED AS THE TRANSITION BETWEEN THE JOINT TYPES.
4. PIPING BETWEEN WATER VALVE AND HYDRANT SHALL BE DUCTILE IRON.
5. SEE DETAIL 362 FOR LOCATION OF HYDRANT.
6. PUMPER CONNECTION SHALL FACE THE STREET.
7. NO VALVES ARE TO BE LOCATED IN CURB.
8. NATIONAL STANDARD THREADS REQUIRED ON ALL CONNECTIONS UNLESS OTHERWISE DIRECTED.
9. SEE DETAIL 360–3 FOR CONCRETE PAD.
10. FIRE HYDRANT SHALL BE FRESHLY PAINTED PRIOR TO FINAL ACCEPTANCE.
11. SEE SECTION 756 FOR HYDRANT MATERIAL.

DETAIL NO.				REVISED	DETAIL NO.
360-1	MARICOPA ASSOCIATION of GOVERNMENTS	STANDARD DETAIL ENGLISH	DRY BARREL FIRE HYDRANT INSTALLATION	01–01–2013	360-1

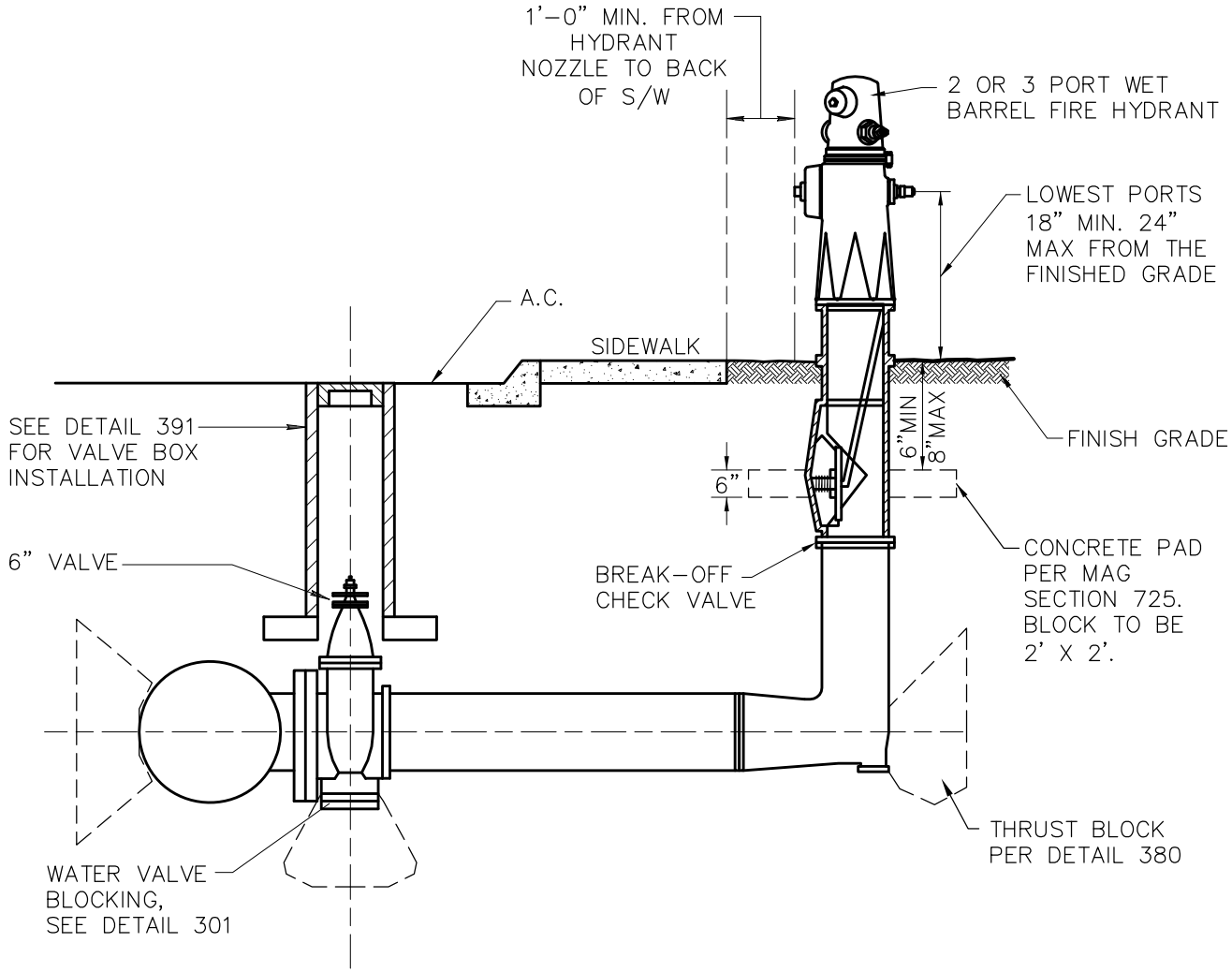

NOTES:

1. JOINTS BETWEEN THE VALVE AND THE MAIN SHALL BE FLANGED TYPE. JOINTS BETWEEN THE VALVE AND HYDRANT SHALL BE MECHANICAL RESTRAINT MECHANICAL TYPE.
2. RESTRAINTS SHALL BE MECHANICAL RESTRAINT OR THRUST BLOCK PER DETAIL 380.
3. A FLANGE JOINT BY MECHANICAL JOINT VALVE SHALL BE USED AS THE TRANSITION BETWEEN THE JOINT TYPES.
4. PIPING BETWEEN WATER VALVE AND HYDRANT SHALL BE DUCTILE IRON.
5. SEE DETAIL 362 FOR LOCATION OF HYDRANT.
6. PUMPER CONNECTION SHALL FACE THE STREET.
7. NO VALVES ARE TO BE LOCATED IN CURB.
8. NATIONAL STANDARD THREADS REQUIRED ON ALL CONNECTIONS UNLESS OTHERWISE DIRECTED.
9. SEE DETAIL 360-3 FOR CONCRETE PAD.
10. FIRE HYDRANT SHALL BE FRESHLY PAINTED PRIOR TO FINAL ACCEPTANCE.
11. THE HYDRANT SHALL HAVE 2- 2½" PORT AND 1- 4½" PORT (INDUSTRIAL OR COMMERCIAL).
12. THE HYDRANT SHALL HAVE 1- 2½" PORT AND 1- 4½" PORT (RESIDENTIAL).

DETAIL NO.				REVISED	DETAIL NO.
360-2	MARICOPA ASSOCIATION of GOVERNMENTS	STANDARD DETAIL ENGLISH	WET BARREL FIRE HYDRANT INSTALLATION	01-01-2013	360-2

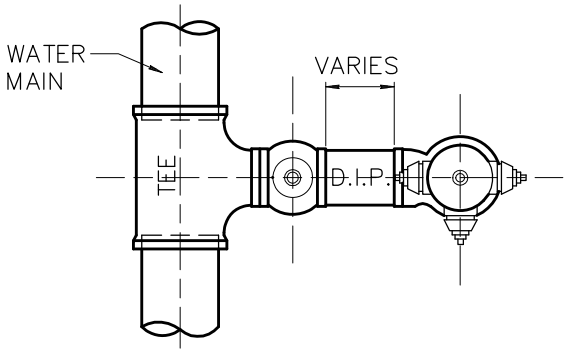

TYP MAIN CONNECTION
(PREFERRED)

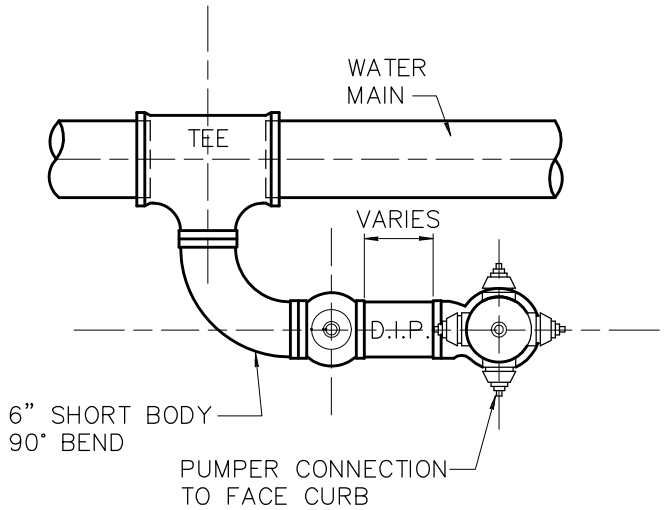

ALT MAIN
CONNECTION

SQUARE OR ROUND IS ACCEPTABLE
IF ROUND: 24" DIAMETER MIN. REQUIRED

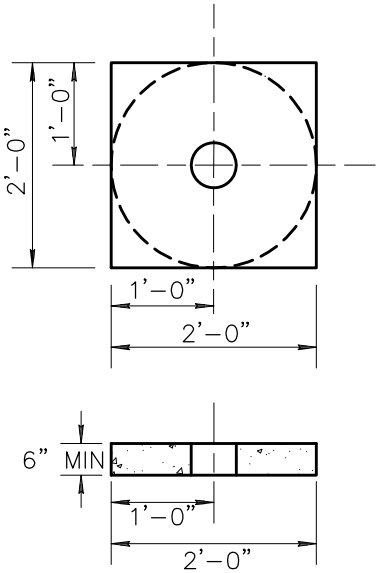

CONCRETE PAD
LOCATION DETAIL

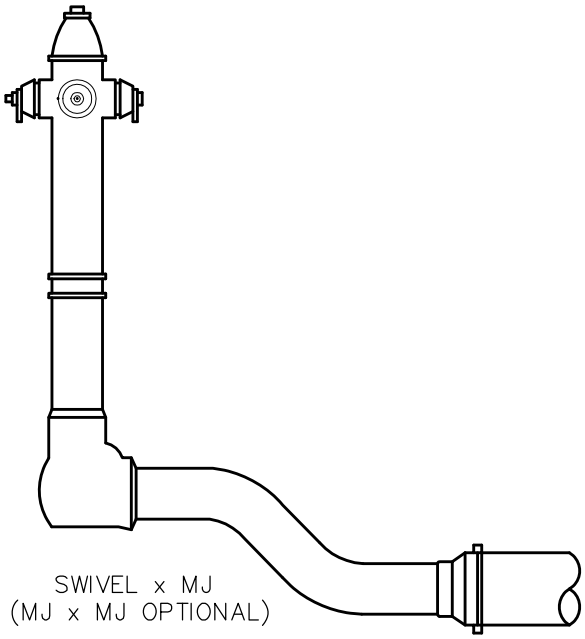

OFFSET FITTINGS

NOTES:

1. CONCRETE FOR PAD SHALL BE CLASS "A".
2. SCORE LINE SHALL BISECT CONCRETE PAD AT MID POINT OF ALL SIDES.
3. CONCRETE COLOR SHALL MATCH ADJACENT CONCRETE. THE FINISHED CONCRETE SURFACE SHALL HAVE A ROUGH BROOM FINISH (SURFACE ONLY).
4. MULTIPLE OFFSET FITTINGS SHALL NOT BE ALLOWED.
5. MINIMUM 36" CLEARANCE PER NFPA-24 AROUND FIRE HYDRANT.
6. 1/2" BITUMINOUS EXPANSION SHALL BE PLACED AROUND THE BARREL OF THE FIRE HYDRANT AT THE CONCRETE PAD.

DETAIL NO.		STANDARD DETAIL		REVISED	DETAIL NO.
360-3	MARICOPA ASSOCIATION of GOVERNMENTS	ENGLISH	FIRE HYDRANT INSTALLATION DETAILS	01-01-2013	360-3

NOTES:

1. OBSTRUCTIONS SUCH AS UTILITY POLES, STREET SIGNS, IRRIGATION BOXES, FENCES, ETC., MUST NOT BE PLACED BETWEEN CURB AND HYDRANT AND WITHIN THE RADIUS FOR FIRE DEPT. ACCESS.

2. DIMENSIONS SHOWN ON CONSTRUCTION DRAWINGS SUPERSEDE LOCATIONS SHOWN HERE.

3. ON LOCATIONS IN MIDBLOCK, THE FIRE HYDRANT WILL BE ALIGNED WITH A PROPERTY LINE.

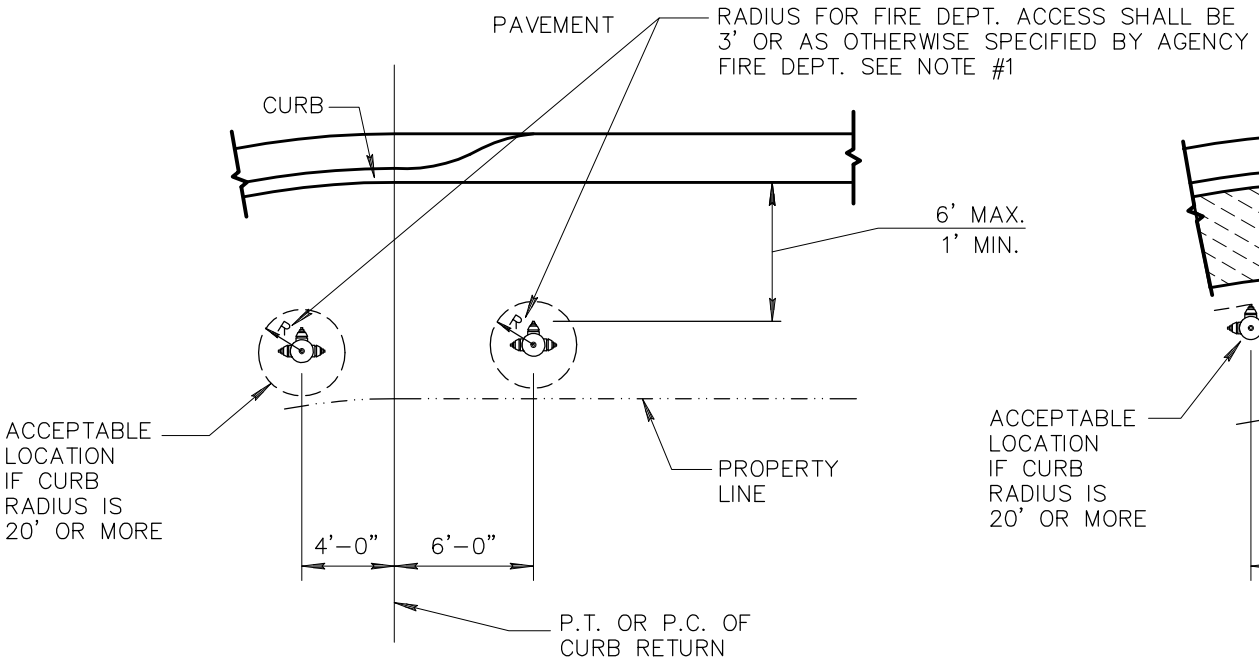

PARKWAY AREA OR NO SIDEWALK

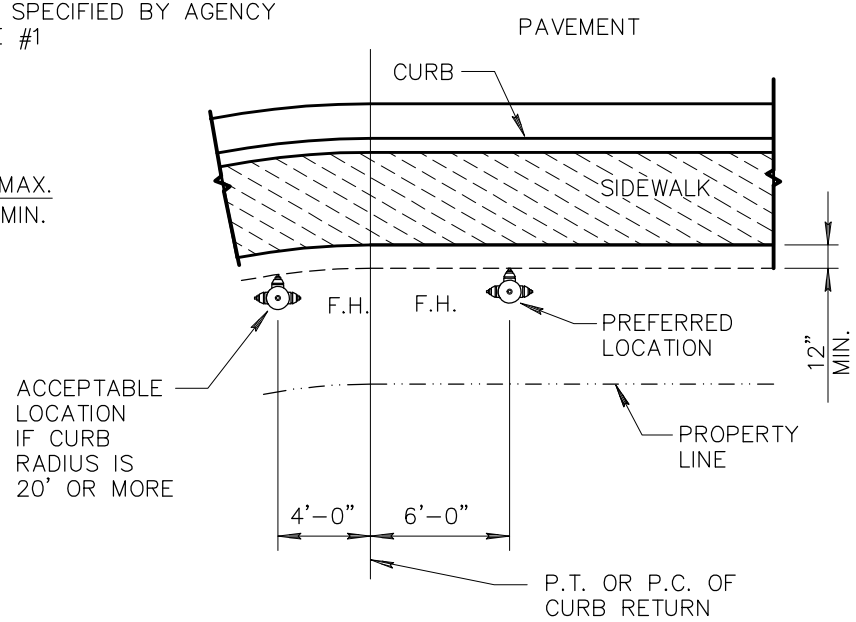

AREA WITH SIDEWALK

DETAIL NO.		STANDARD DETAIL		REVISED	DETAIL NO.
362	MARICOPA ASSOCIATION of GOVERNMENTS	ENGLISH	LOCATIONS FOR NEW FIRE HYDRANTS	01-01-1999	362