MARICOPA COUNTY
Department of Transportation

MEMORANDUM

Date: July 6, 2005

To: MAG Specifications and Details Committee

From: Robert Herz

Subject: Revision to Section 340 and Details 210

Purpose: Add Detectable Warnings to MAG Specifications and Details to commence adjustments to MAG details and specifications to approach compliance with ADA requirements.

Changes: Add Detectable Warning specifications into sections 340.

Add Detectable Warning graphics on curb ramp details 231, 232, 233, and 234.

1. Replace ramp groove with 2' wide Detectable Warning.
2. Replace ramp groove at other locations with "Rough Broom Finish, Use A Ripple Surface Pattern".
3. Add Note: Detectable Warning is to comply with the jurisdictional agency's requirements.

2901 West Durango St. - Phoenix, Arizona 85009-6357

DETECTABLE WARNINGS

340.2 MATERIALS add the following:

340.2.1 Detectable Warnings

Detectable warnings shall consist of raised truncated domes aligned in a square grid pattern in conformity to the Americans with Disabilities Accessibility Guidelines. Truncated domes shall have the following nominal dimensions: base diameter of 0.9 inches, top diameter of 0.4 inches, height of 0.2 inches, and dome spacing center-to-center spacing of 2.35 inches, measured between the most adjacent domes on the square grid. Detectable warnings shall contrast visually with adjoining surfaces. Visual contrast shall be obtained by color, use safety yellow or other approved color. The color shall be an integral part of the material surface. The material is to be durable with a non-slip surface not subject to spalling, chipping, delamination, or separation. Surface applications dependent on an adhesive bonding agent(s) are not approved for use. All detectable warnings must be approved by the jurisdictional agency prior to installation.

340.3 CONSTRUCTION METHODS add the following:

340.3.1 Detectable Warnings

Detectable warnings are to be installed at locations that represent potential hazards for pedestrians with vision impairments such locations include walkways that cross roads or railroad tracks. Detectable warnings shall be installed on walkways that adjoin or cross a roadway whenever the walking surface is not separated by curbs, railings or other approved elements. Detectable warnings shall be installed on all sidewalk ramps at street crossings. The detectable warning surface shall be located so that the edge nearest the curb line is 6 inches minimum and 8 inches maximum back from the face of curb. Detectable warning surfaces for railroads shall be located so that the edge nearest the rail crossing is 6 inches minimum and 8 inches maximum from the vehicle dynamic envelope.

Detectable warnings shall be installed perpendicular to the direction of travel and have a minimum width of 24 inches. The base surface of detectable warnings shall be installed flush with the adjacent walkway surface, the truncated domes shall extend above the walkway surface. The boundary between detectable warnings and the adjacent walkway shall provide a flush uniform surface that will not cause ponding of water nor present a tripping hazard.

Detectable warning installed on sidewalk ramps shall modify the sidewalk concrete thickness at the detectable warning to provide a minimum thickness of four-inches (4"). When detectable warnings are modules inset into the sidewalk ramp, the bottom surface of the sidewalk shall be lowered a distance equal to or greater than the module thickness to maintain the minimum sidewalk thickness. The sidewalk bottom surface

shall have a minimum transition taper length of 12" between the thickened and normal depth sections of sidewalk.

340.5 MEASUREMENT add the following:

Detectable Warning shall not be measured for payment. Detectable warning is considered integral to the walking surface that it forms a part of and its cost is included in the related pay item.

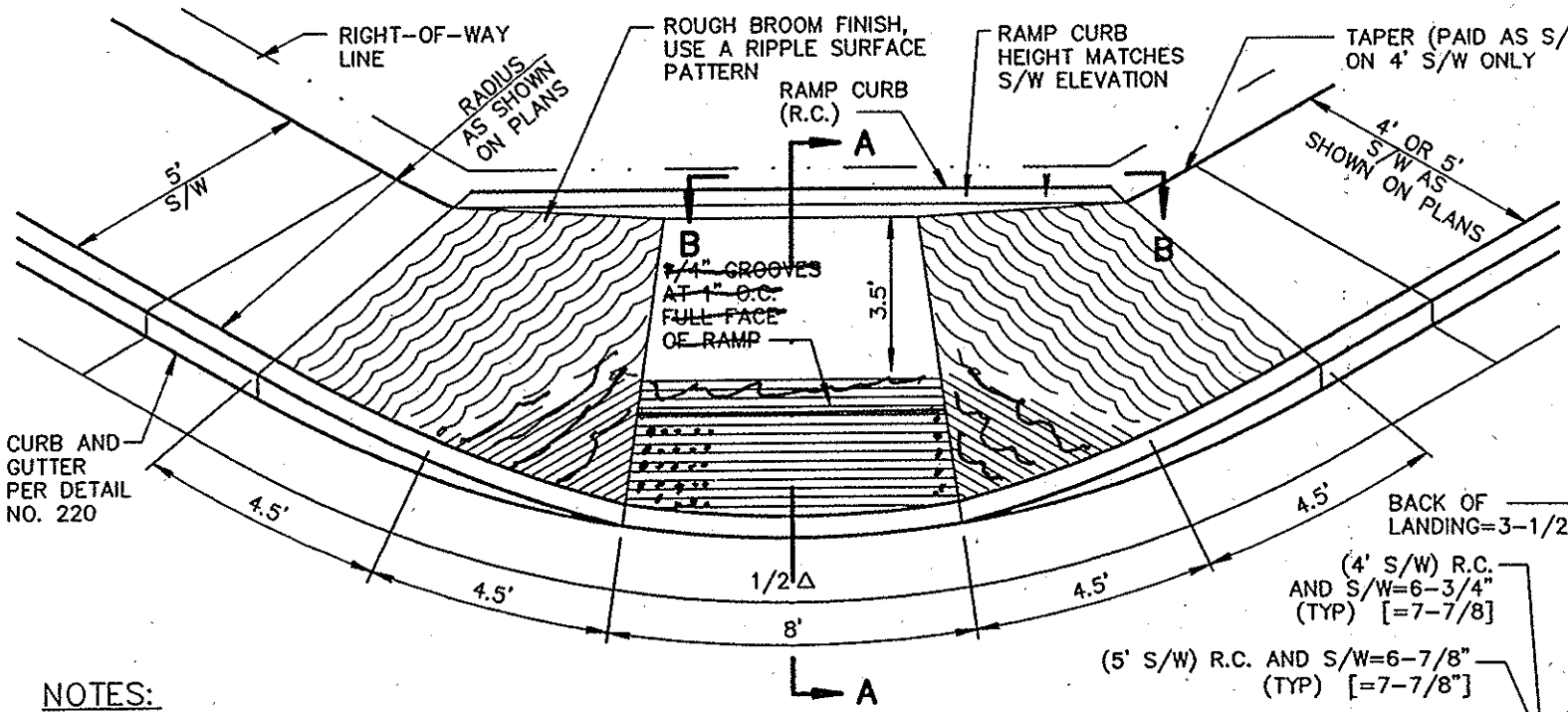

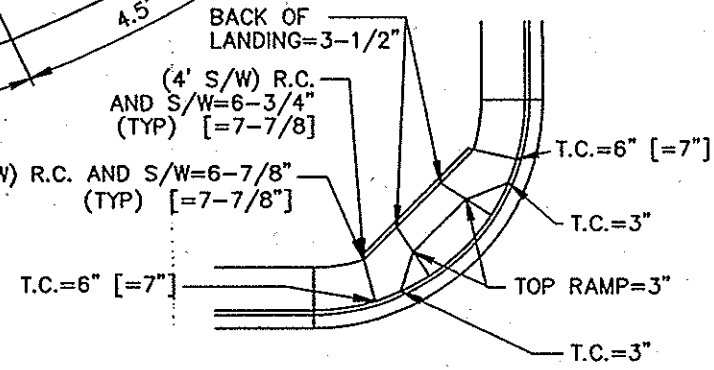

CONTROL ELEVATIONS

SEE NOTES 1 AND 3

NOTES:

1. CONTROL ELEVATIONS SHOWN ARE IN RELATION TO THE GUTTER AND ARE LOCATED RADIALLY. GUTTER ELEVATION=0.
2. CLASS 'B' CONCRETE CONSTRUCTION AS PER SECTION 725.
3. WHEN CURB HEIGHTS OF 7" ARE SHOWN ON PLANS, USE DIMENSIONS SHOWN IN [ ]'S.
4. Detectable Warning is to comply with the jurisdictional agency's requirements.

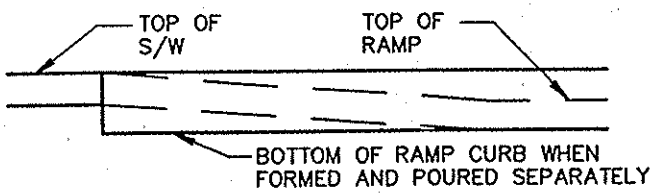

SECTION B-B

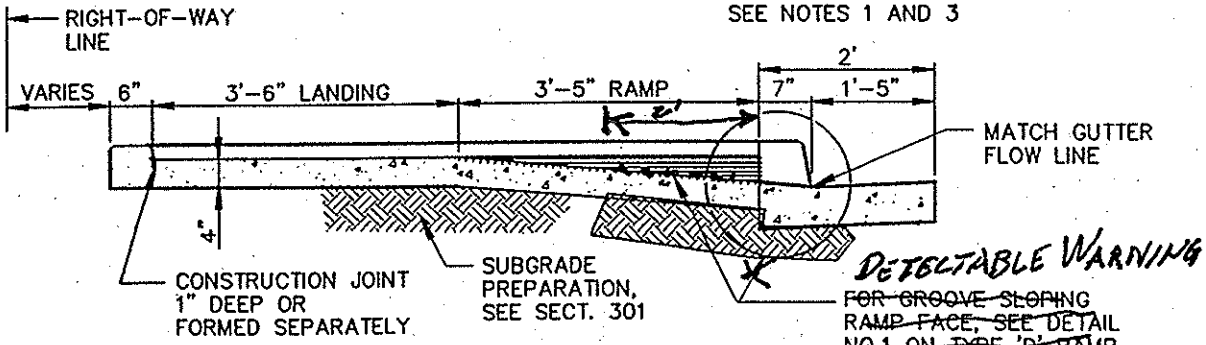

SECTION A-A

DETAIL NO.				REVISED	DETAIL NO.
231	MARICOPA ASSOCIATION of GOVERNMENTS	STANDARD DETAIL ENGLISH	SIDEWALK RAMPS – TYPE 'A'		231

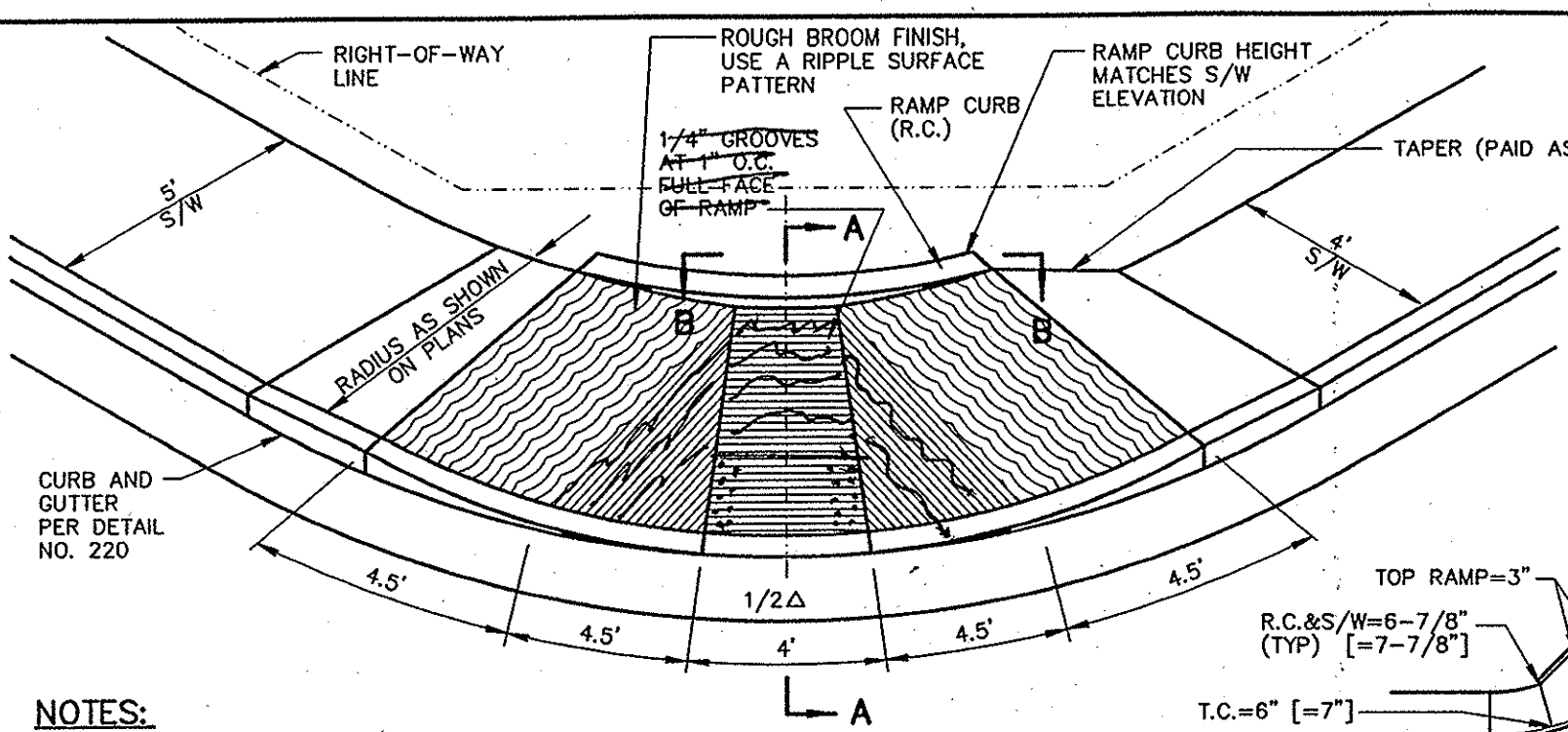

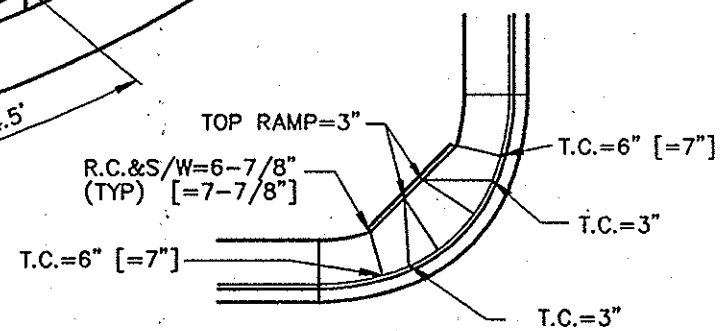

CONTROL ELEVATIONS

SEE NOTES 1 AND 3

NOTES:

1. CONTROL ELEVATIONS SHOWN ARE IN RELATION TO THE GUTTER AND ARE LOCATED RADIALLY. GUTTER ELEVATION=0.
2. CLASS 'B' CONCRETE CONSTRUCTION AS PER SECT. 725.
3. WHEN CURB HEIGHTS OF 7" ARE SHOWN ON PLANS, USE DIMENSIONS SHOWN IN [ ]'S.
4. Detectable Warning is to comply with the jurisdictional agency's requirements.

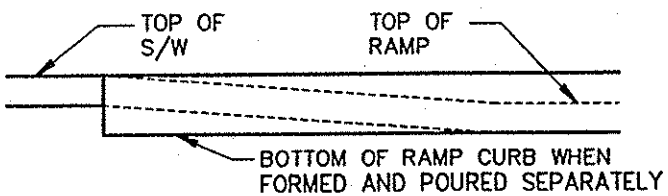

SECTION B-B

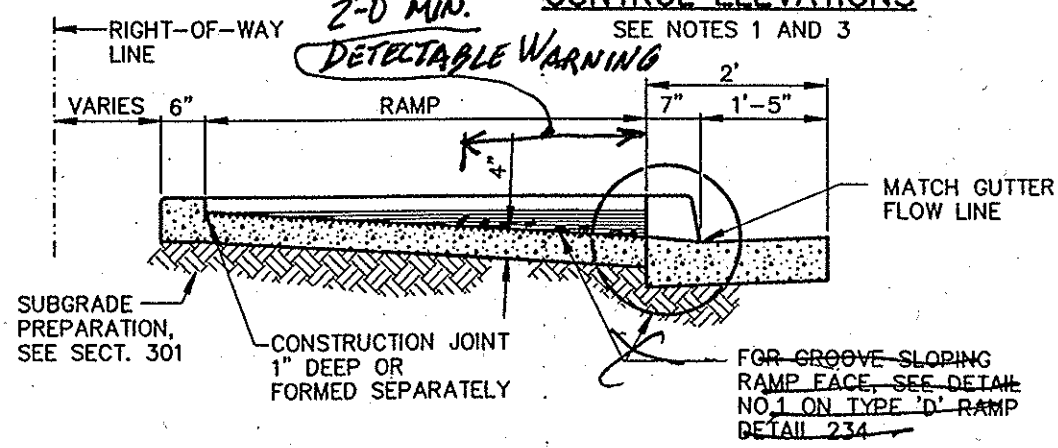

SECTION A-A

DETAIL NO.				REVISED	DETAIL NO.
232	MARICOPA ASSOCIATION of GOVERNMENTS	STANDARD DETAIL ENGLISH	SIDEWALK RAMPS – TYPE 'B'		232

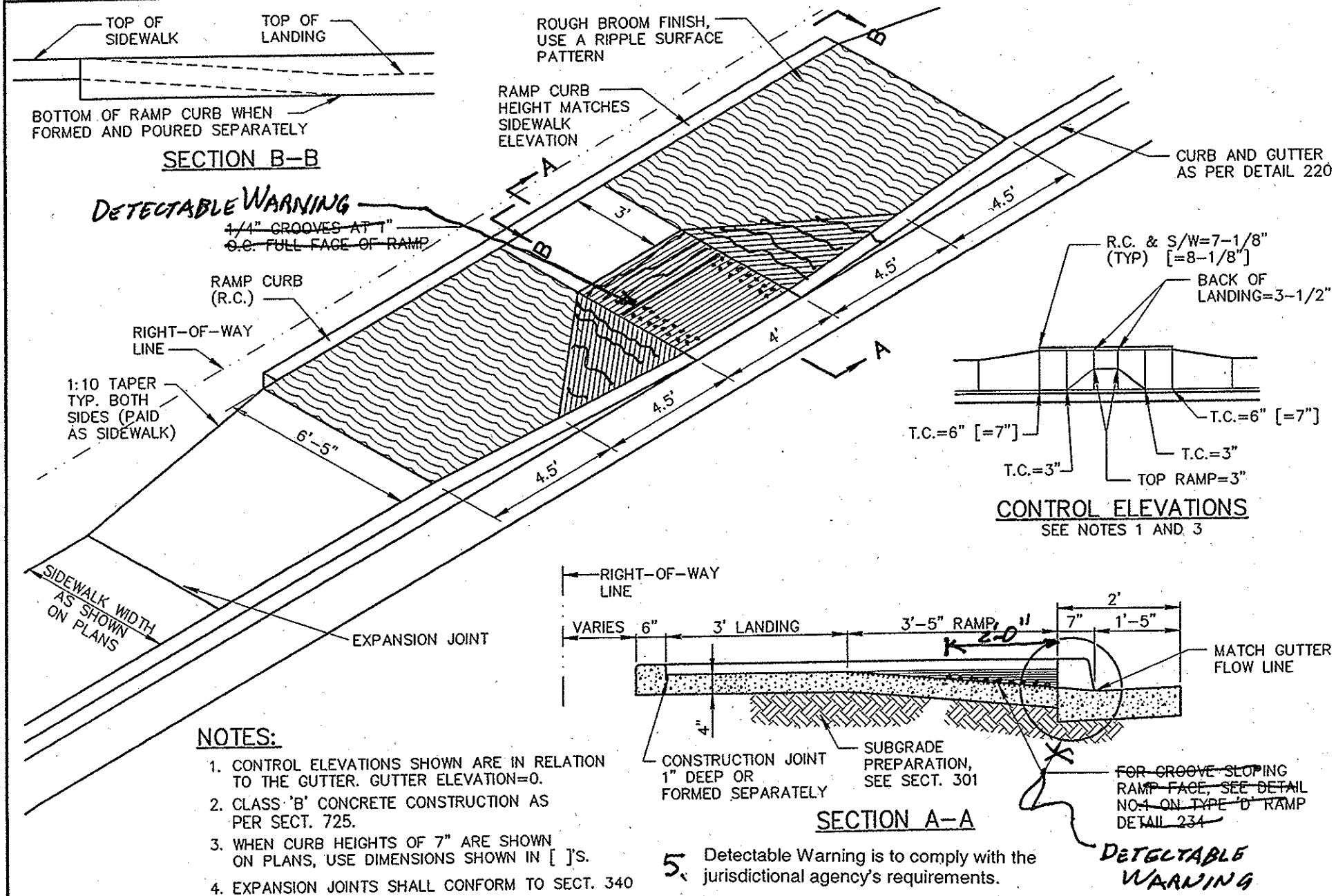

NOTES:

1. CONTROL ELEVATIONS SHOWN ARE IN RELATION TO THE GUTTER. GUTTER ELEVATION=0.
2. CLASS 'B' CONCRETE CONSTRUCTION AS PER SECT. 725.
3. WHEN CURB HEIGHTS OF 7" ARE SHOWN ON PLANS, USE DIMENSIONS SHOWN IN [ ]'S.
4. EXPANSION JOINTS SHALL CONFORM TO SECT. 340
5. Detectable Warning is to comply with the jurisdictional agency's requirements.

DETAIL NO.			REVISED	DETAIL NO.
233	MARICOPA ASSOCIATION of GOVERNMENTS — STANDARD DETAIL ENGLISH	SIDEWALK RAMPS - TYPE 'C'	01–01–2003	233

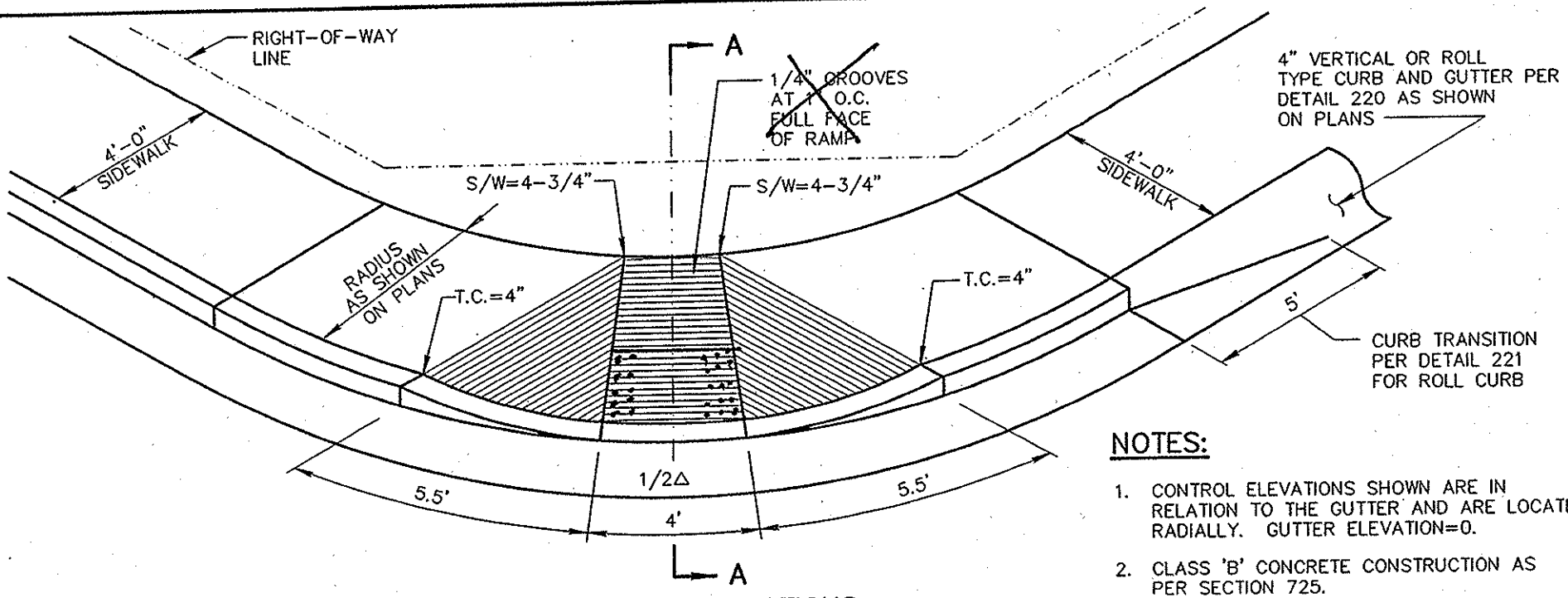

CONTROL ELEVATIONS

NOTES:

1. CONTROL ELEVATIONS SHOWN ARE IN RELATION TO THE GUTTER AND ARE LOCATED RADIALLY. GUTTER ELEVATION=0.
2. CLASS 'B' CONCRETE CONSTRUCTION AS PER SECTION 725.
3. Detectable Warning is to comply with the jurisdictional agency's requirements.

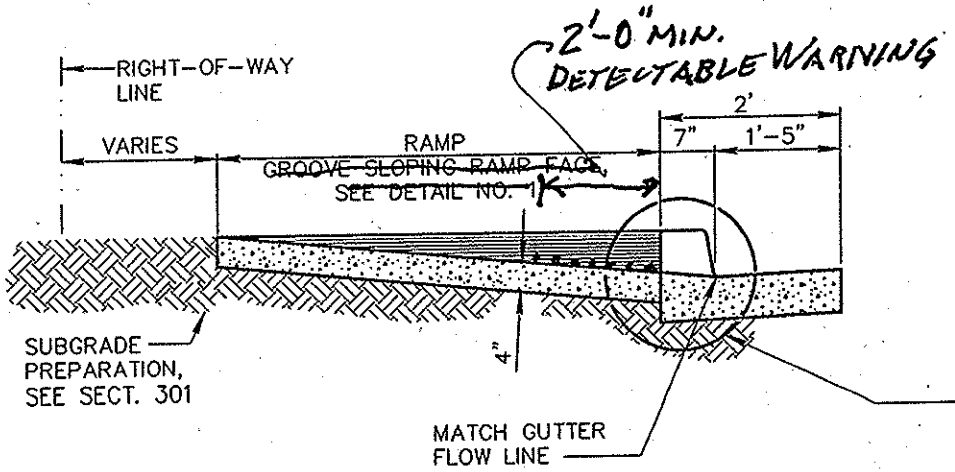

SECTION A-A

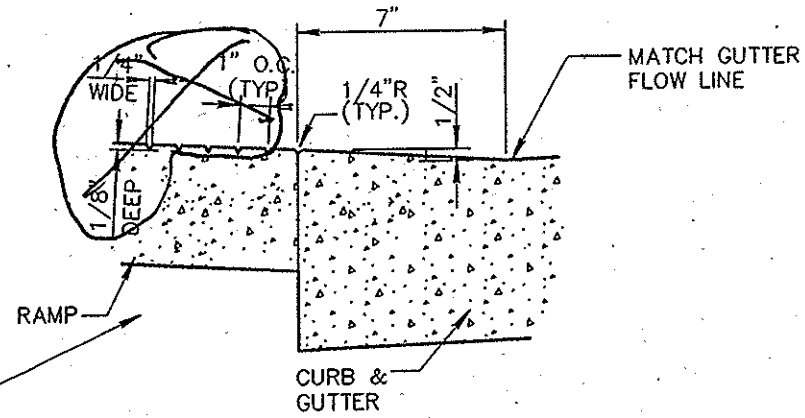

DETAIL 1

DETAIL NO.				REVISED	DETAIL NO.
234	MARICOPA ASSOCIATION of GOVERNMENTS	STANDARD DETAIL ENGLISH	SIDEWALK RAMPS - TYPE 'D'	01-03-2002	234