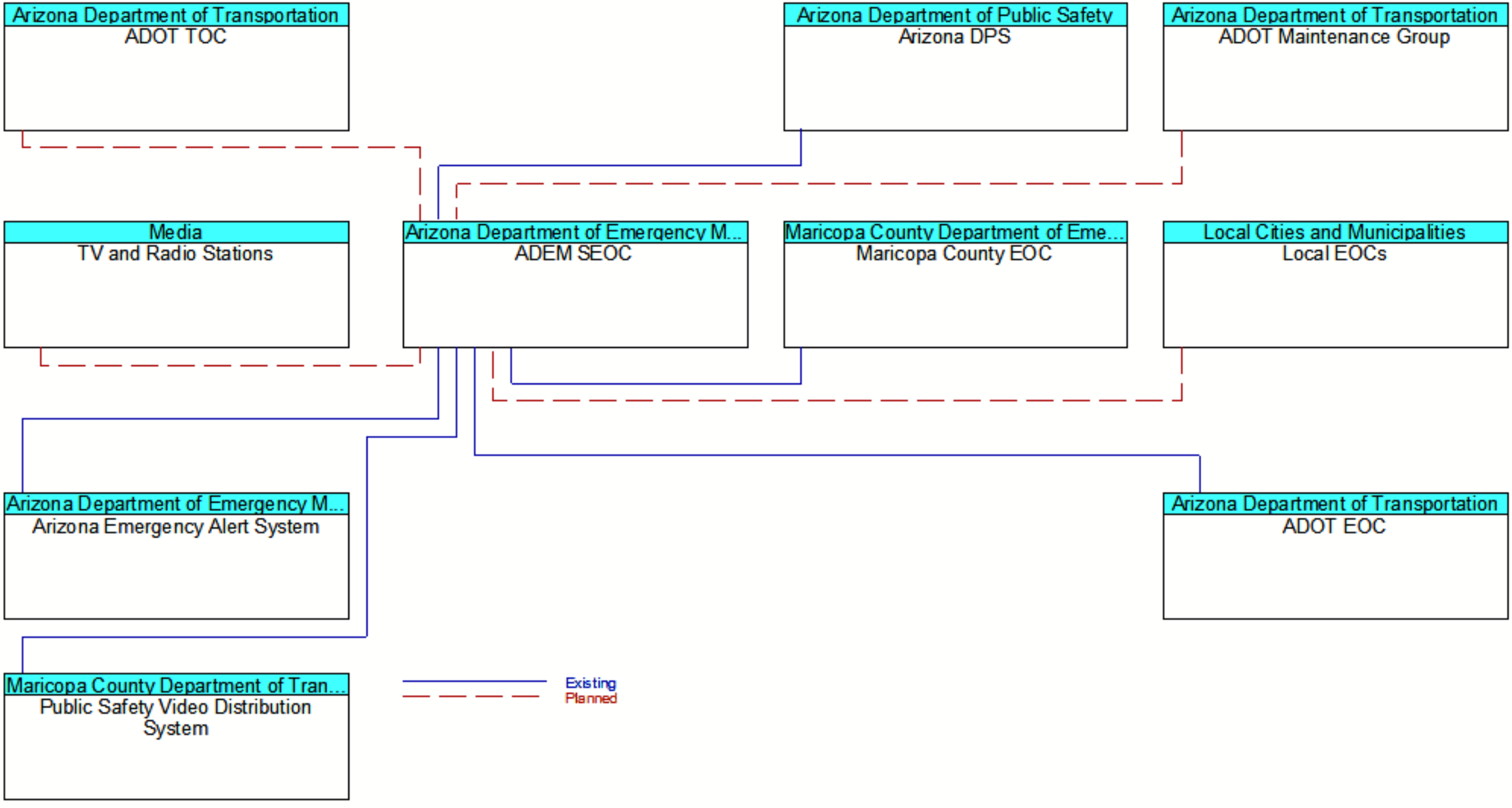
Arizona Department of Transportation
ADOT TOC
Arizona Department of Public Safety
Arizona DPS
Arizona Department of Transportation
ADOT Maintenance Group
Media
TV and Radio Stations
Arizona Department of Emergency M...
ADEM SEOC
Maricopa County Department of Eme...
Maricopa County EOC
Local Cities and Municipalities
Local EOCs
Arizona Department of Emergency M...
Arizona Emergency Alert System
Arizona Department of Transportation
ADOT EOC
Maricopa County Department of Tran...
Public Safety Video Distribution System
Existing
Planned