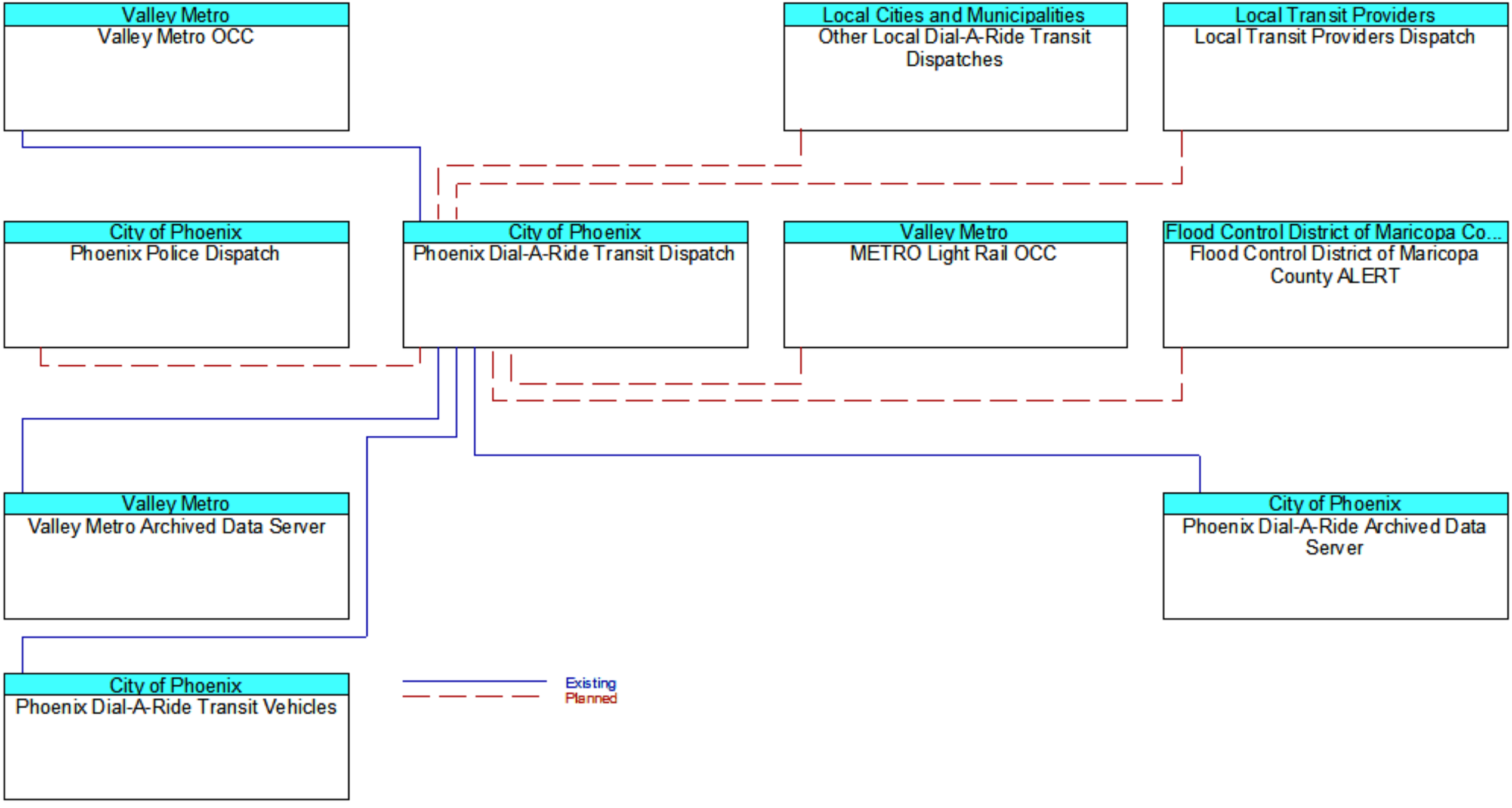
Valley Metro
Valley Metro OCC
Local Cities and Municipalities
Other Local Dial-A-Ride Transit Dispatches
Local Transit Providers
Local Transit Providers Dispatch
City of Phoenix
Phoenix Police Dispatch
City of Phoenix
Phoenix Dial-A-Ride Transit Dispatch
Valley Metro
METRO Light Rail OCC
Flood Control District of Maricopa Co...
Flood Control District of Maricopa County ALERT
Valley Metro
Valley Metro Archived Data Server
City of Phoenix
Phoenix Dial-A-Ride Archived Data Server
City of Phoenix
Phoenix Dial-A-Ride Transit Vehicles
Existing
Planned