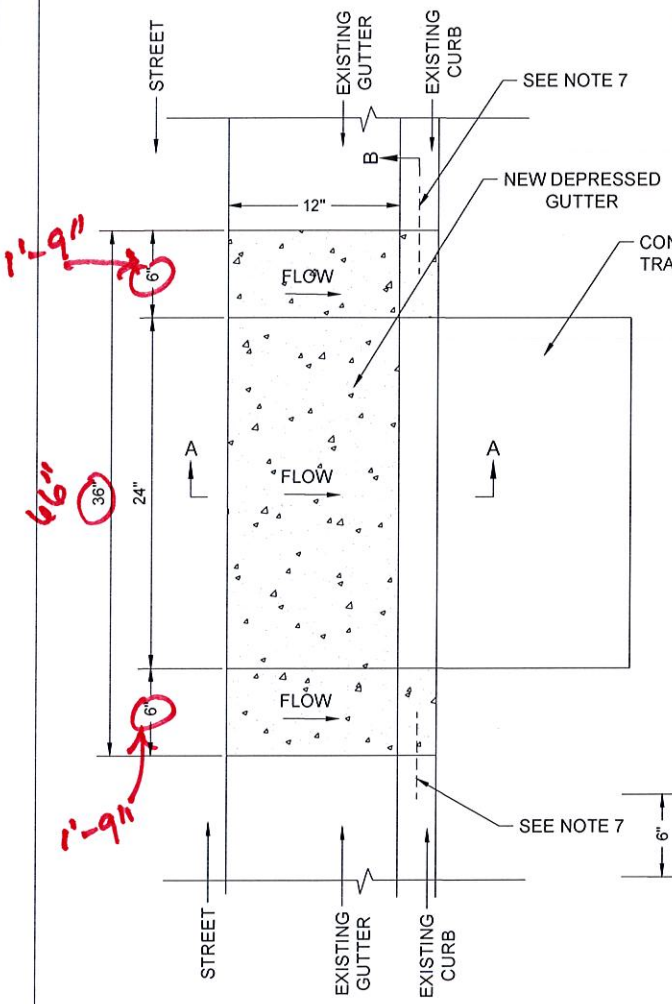

CURB OPENING - TYPE 1

RETROFIT OPENING
WITH VERTICAL CUT

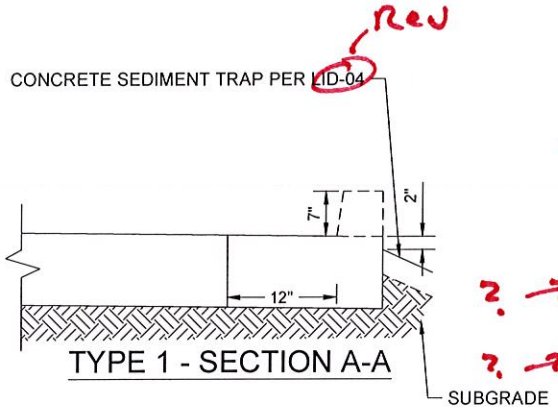

TYPE 1 - SECTION A-A

NOTES:

1. ~~HEADED CONCRETE ANCHORS SHALL MEET THE REQUIREMENTS OF ASTM A-108.~~
2. ~~END PLATES SHALL MEET THE REQUIREMENTS OF ASTM A-36.~~
3. ~~ENTIRE ASSEMBLY SHALL BE HOT DIP GALVANIZED IN ACCORDANCE WITH ASTM A-123.~~
4. ~~DESIGN VERTICAL WHEEL LOAD IS 8.5 KIPS.~~
5. SEE SPECIFICATION 341 FOR MATERIAL AND CONSTRUCTION INFORMATION.
6. REFER TO AASHTO ROADWAY DESIGN GUIDE FOR CLEAR ZONE REQUIREMENTS FOR SPEED DESIGNS. ?
7. DRILL & EPOXY #4x6"REBAR
8. DETAIL SHALL BE USED IN COMBINATION WITH MAG 206 FOR ATTACHED SIDEWALKS. ?

~~NOTES:~~

1. ~~DETAIL IS PROHIBITED FOR USE ALONG ARTERIAL CLASSIFIED ROADWAYS.~~
2. ~~UTILIZATION WITHIN THE PUBLIC RIGHT OF WAY REQUIRES A PRIVATE MAINTENANCE AGREEMENT WITH THE CITY OF PHOENIX.~~

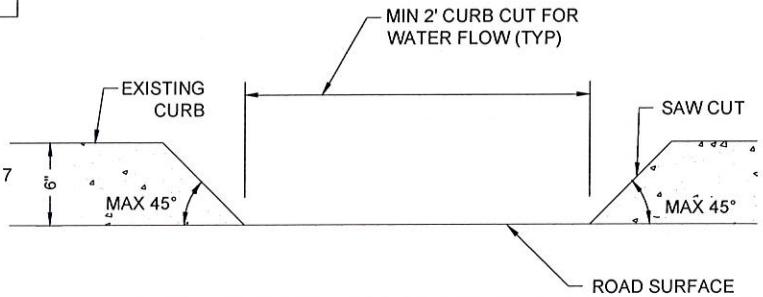

CURB OPENING - TYPE 2

ANGLED CURB CUT

NOTES:

1. DO NOT CUT DEEPER THAN ROAD SURFACE ELEVATION.
2. ALL CURB OPENINGS SHALL BE MADE BY SAW CUT METHOD.
3. GRIND EXPOSED METAL AND SEAL TO PROTECT FROM CORROSION.

MAG Title Block

DETAIL NO.	STANDARD DETAIL ENGLISH	CURB OPENINGS	REVISED	DETAIL NO.
LID–02			01-29-2019	LID–02

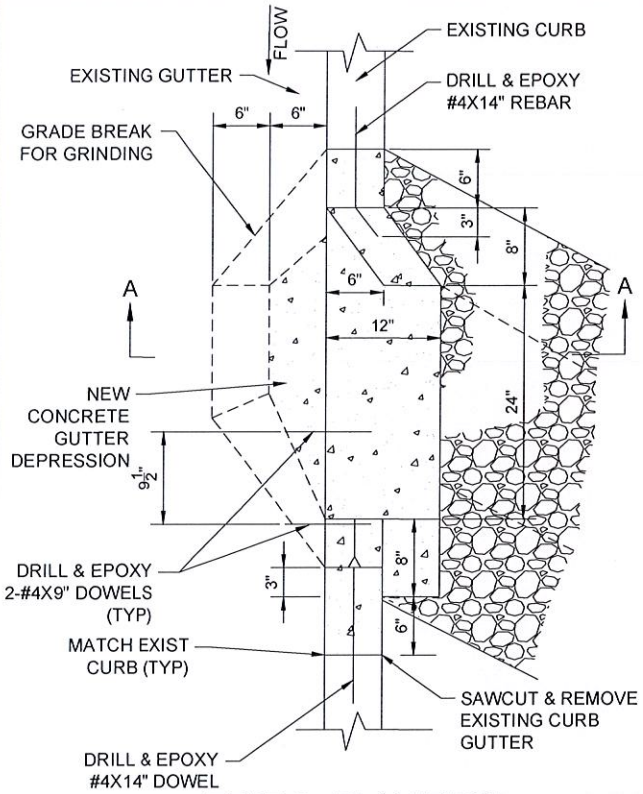

TYPE 3 - PLAN VIEW

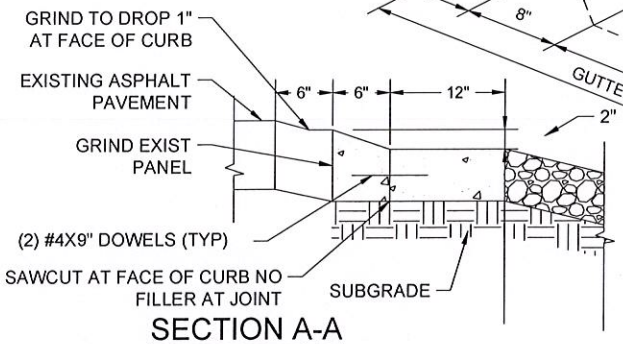

SECTION A-A

CURB OPENING - TYPE 3

CONCENTRATED FLOW INLET

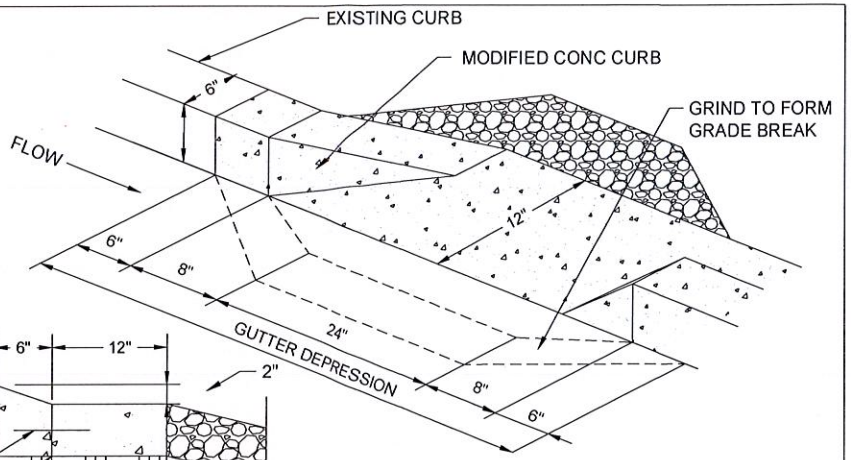

TYPE 3 -ISOMETRIC VIEW

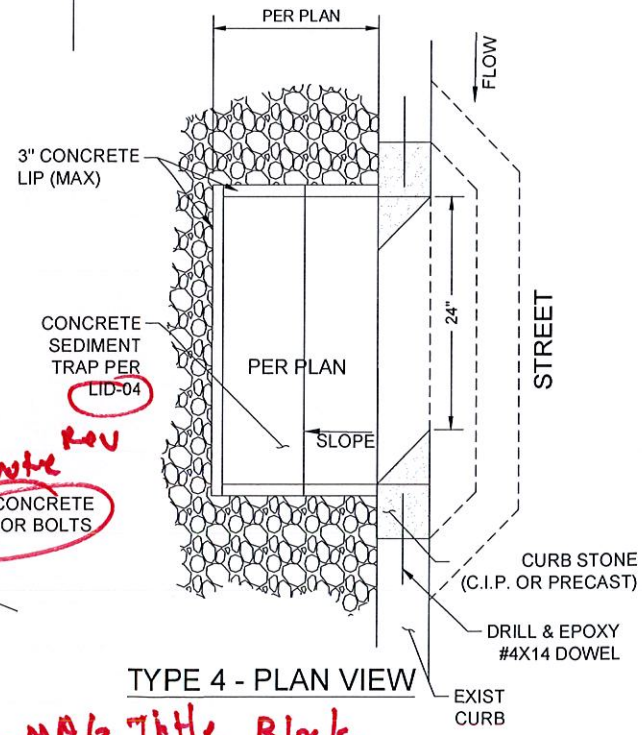

TYPE 4 - PLAN VIEW

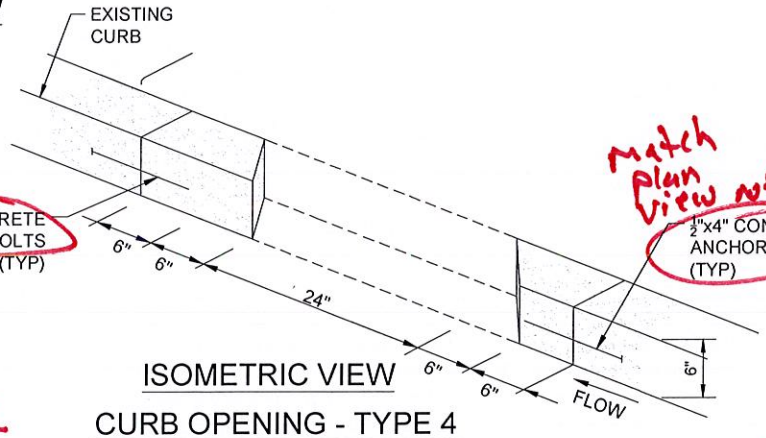

match plan view note

match plan view note

ISOMETRIC VIEW

CURB OPENING - TYPE 4

CONCRETE FLOW INLET

NOTES:

1. DETAIL IS PROHIBITED FOR USE ALONG ARTERIAL CLASSIFIED ROADWAYS.
2. UTILIZATION WITHIN THE PUBLIC RIGHT OF WAY REQUIRES A PRIVATE MAINTENANCE AGREEMENT WITH THE CITY OF PHOENIX.

MAG Title Block

DETAIL NO.	STANDARD DETAIL ENGLISH	CURB OPENINGS	REVISED	DETAIL NO.
LID–03			01-29-2019	LID–03