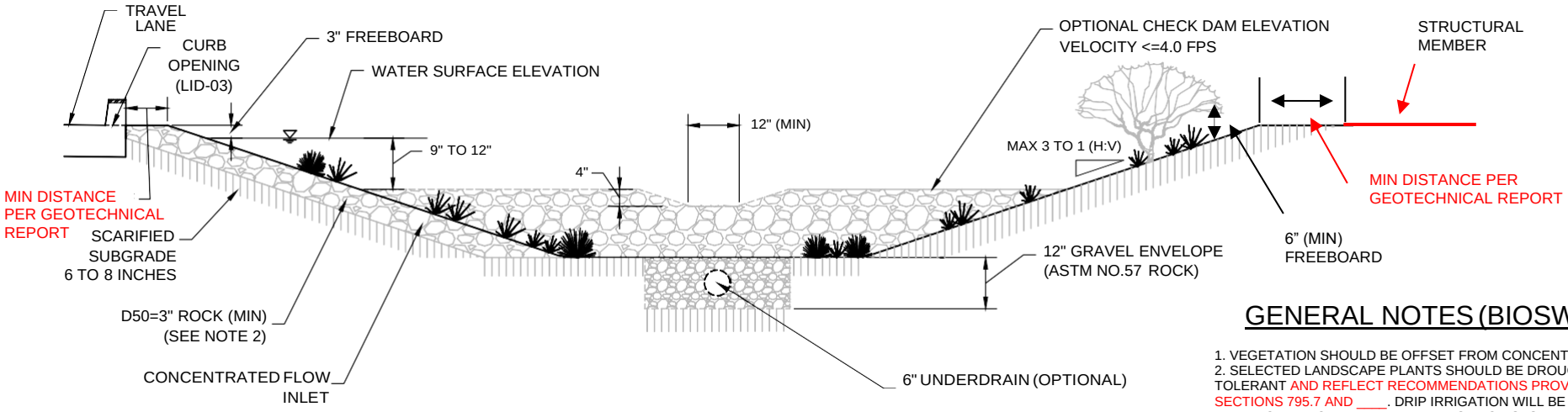

BIOSWALE SECTION

GENERAL NOTES (BIOSWALE):

1. VEGETATION SHOULD BE OFFSET FROM CONCENTRATED FLOW.
2. SELECTED LANDSCAPE PLANTS SHOULD BE DROUGHT TOLERANT AND REFLECT RECOMMENDATIONS PROVIDED IN SECTIONS 795.7 AND ____. DRIP IRRIGATION WILL BE PROVIDED BY A TEMPORARY OR PERMANENT IRRIGATION SYSTEM.
3. DO NOT PLANT OVER THE OPTIONAL UNDERDRAIN.

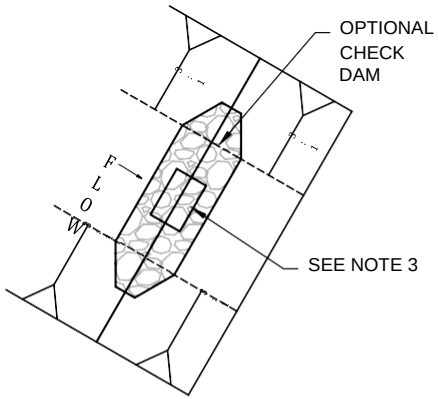

PLAN VIEW

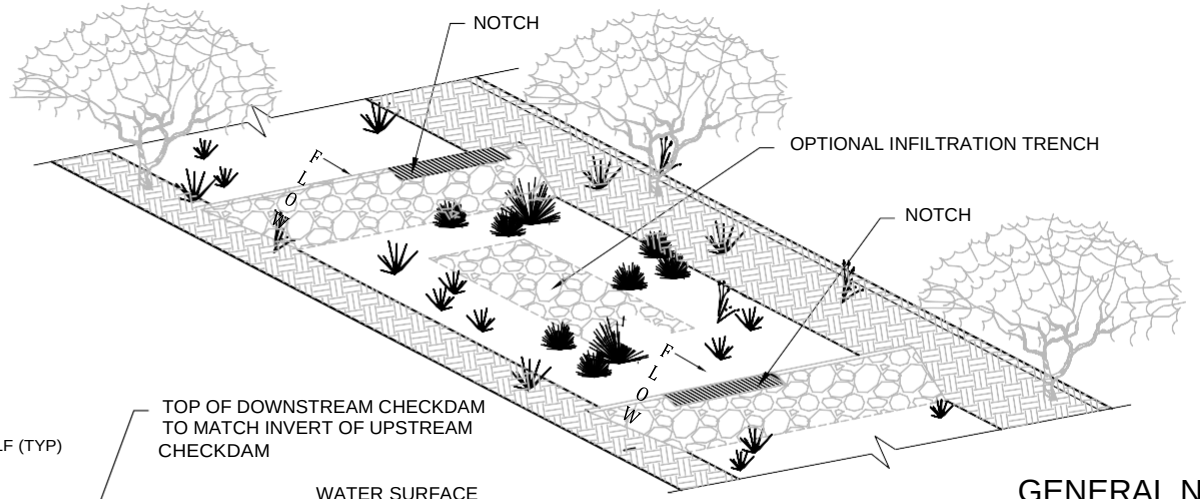

ISOMETRIC VIEW

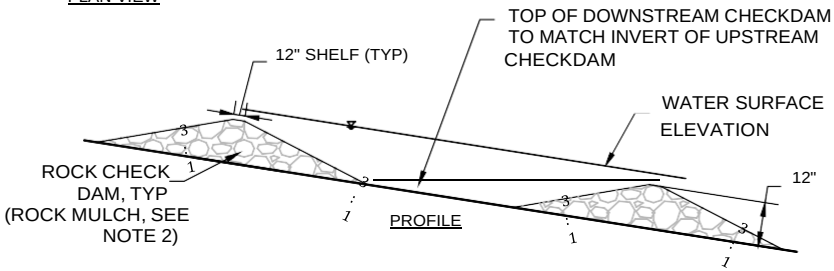

PROFILE

OPTIONAL ROCK CHECK DAM

GENERAL NOTES (CHECK DAM):

1. OPTIONAL CHECK DAM IS MEANT TO DISPERSE DURING HIGHER FLOWS, SEE SECTION 640.3.3 OF SPECIFICATIONS.
2. D50 SIZE DETERMINED BY THE DESIGN REPORT.
3. NOTCHES SHALL BE OFFSET FROM ONE ANOTHER.
4. DEDICATED OUTFLOW REQUIRED FOR THIS FEATURE.
5. OPTIONAL ROCK CHECK DAM TO BE LOCATED TO REDUCE VELOCITIES PER DESIGN REPORT.
6. RIPRAP AND ROCK MULCH REQUIRED WHEN VELOCITIES EXCEED TABLE 6.2 OF THE FLOOD CONTROL DISTRICT OF MARICOPA COUNTY HYDRAULICS MANUAL.

DETAIL NO.			REVISED	DETAIL NO.
XXX	MARICOPA ASSOCIATION of GOVERNMENTS STANDARD DETAIL ENGLISH	VEGETATED OR ROCK BIOSWALES	08-27-2020	XXX