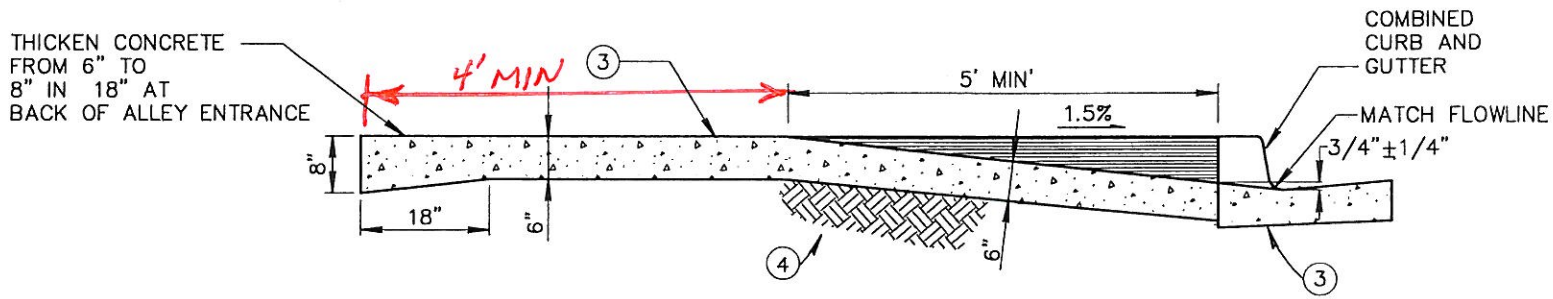

SECTION A–A

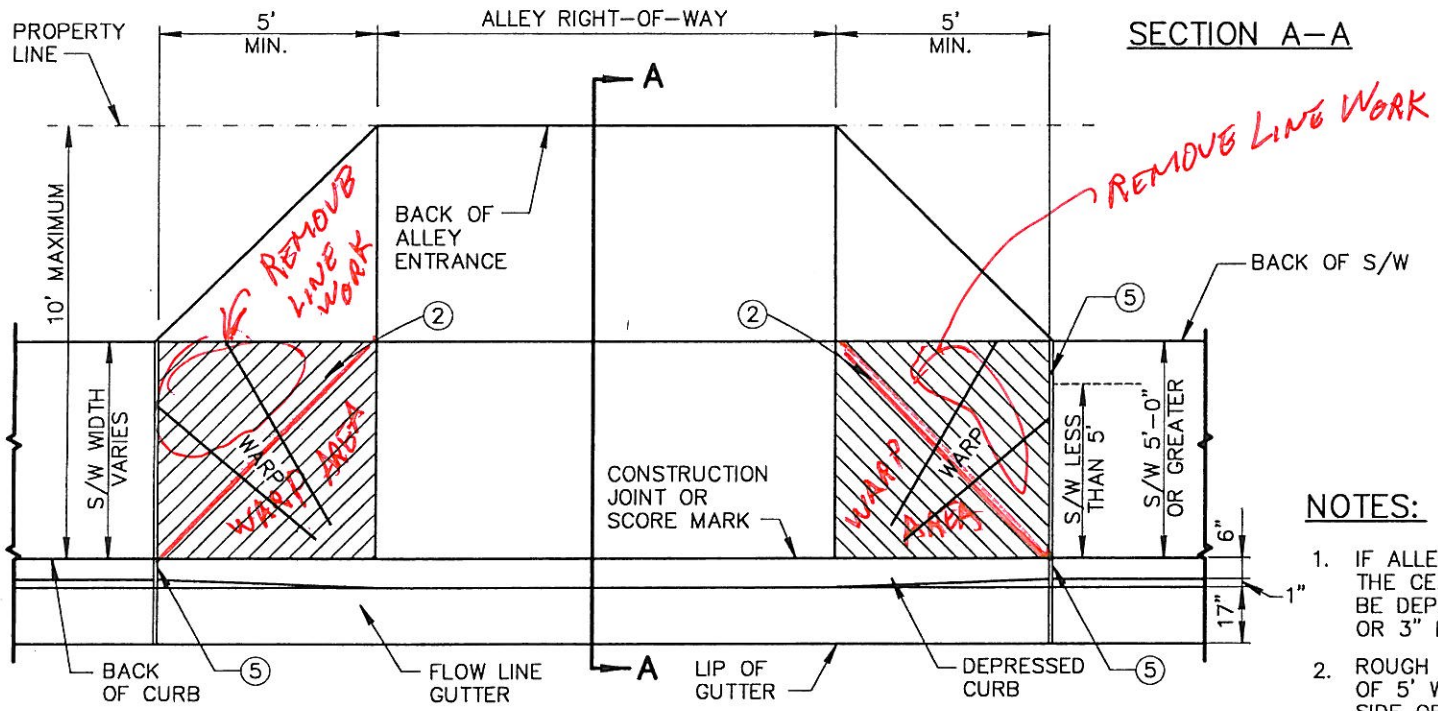

PLAN

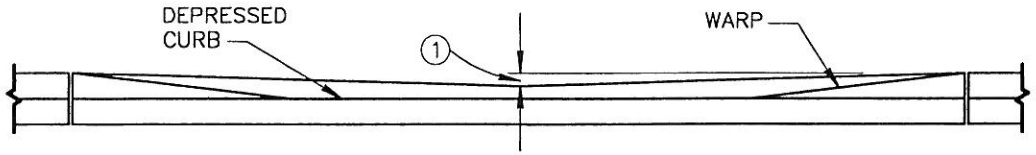

ELEVATION

NOTES:

1. IF ALLEY ENTRANCE IS USED FOR DRAINAGE, THE CENTER BACK OF ALLEY ENTRANCE MAY BE DEPRESSED 2" FOR 4" CURB OR 3" FOR 6" CURB.
2. ROUGH BROOM FINISH FULL WIDTH OF 5' WARP SECTION, EACH SIDE SIDE OF ALLEY ENTRANCE.
3. CLASS 'B' CONCRETE CONSTRUCTION PER SECT. 725.
4. SUBGRADE PREPARATION, PER SECT. 301.
5. EXPANSION JOINTS SHALL CONFORM TO SECTION 340.

DETAIL NO.				REVISED	DETAIL NO.
262	MARICOPA ASSOCIATION of GOVERNMENTS	STANDARD DETAIL ENGLISH	WING TYPE ALLEY ENTRANCE (WITH COMBINED CURB AND GUTTER)	01–01–2006	262

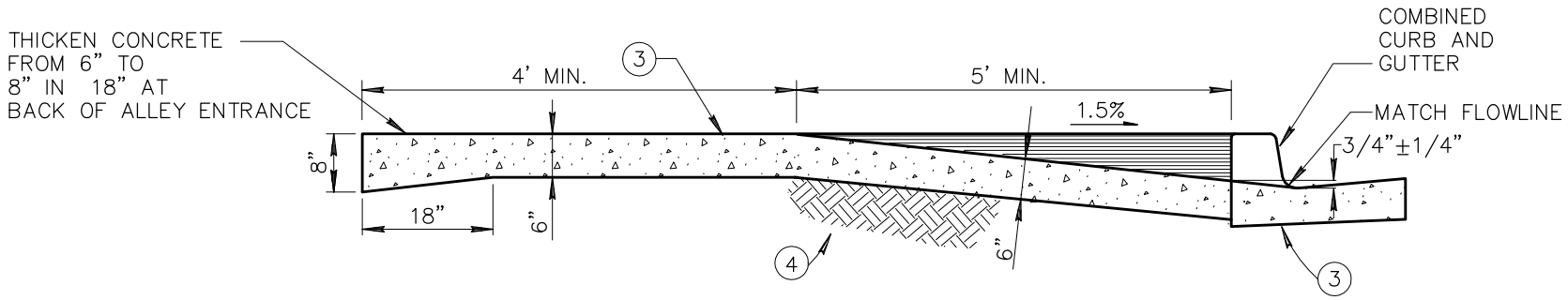

SECTION A–A

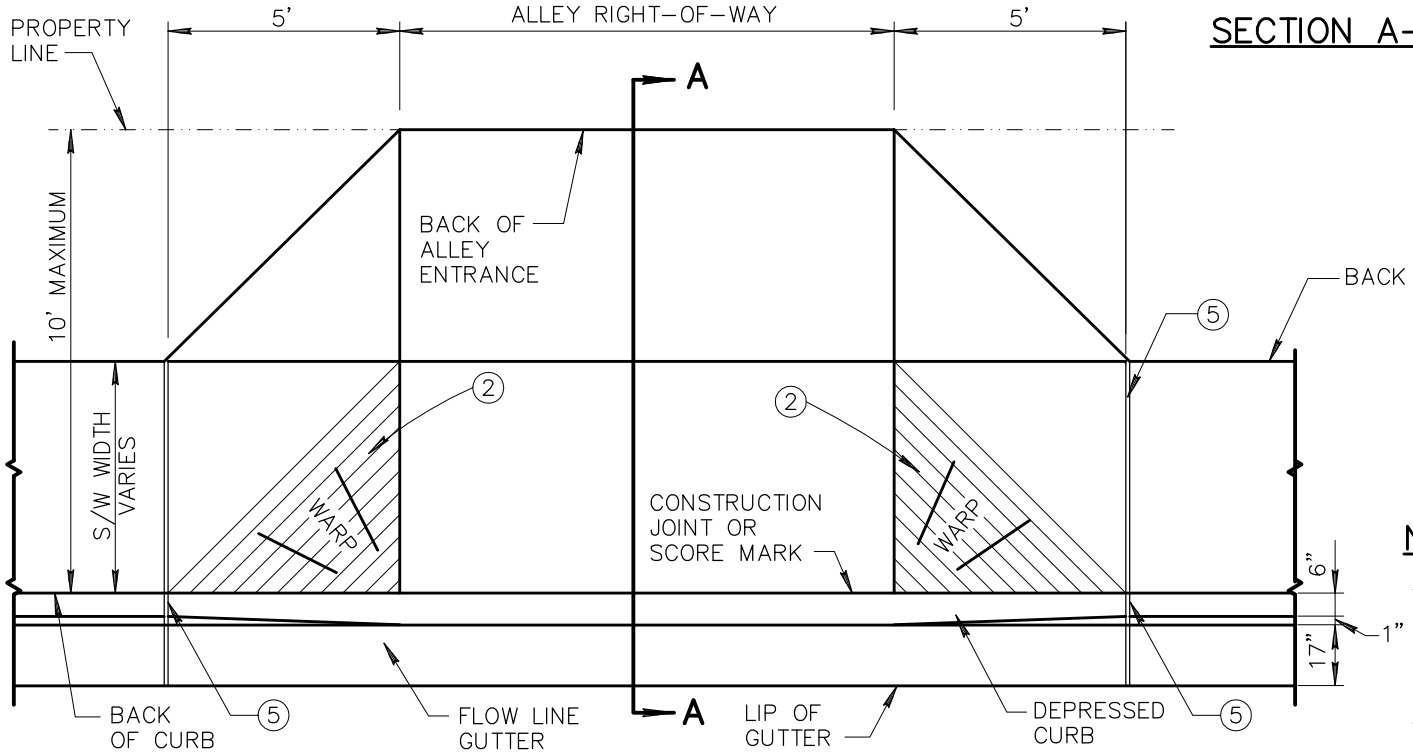

PLAN

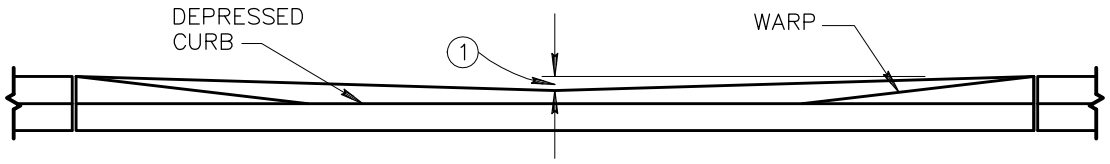

ELEVATION

NOTES:

1. IF ALLEY ENTRANCE IS USED FOR DRAINAGE, THE CENTER BACK OF ALLEY ENTRANCE MAY BE DEPRESSED 2" FOR 4" CURB OR 3" FOR 6" CURB.
2. ROUGH BROOM FINISH FULL WIDTH OF 5' WARP SECTION, EACH SIDE SIDE OF ALLEY ENTRANCE.
3. CLASS 'B' CONCRETE CONSTRUCTION PER SECT. 725.
4. SUBGRADE PREPARATION, PER SECT. 301.
5. EXPANSION JOINTS SHALL CONFORM TO SECTION 340.

DETAIL NO.		STANDARD DETAIL		REVISED	DETAIL NO.
262	MARICOPA ASSOCIATION of GOVERNMENTS	ENGLISH	WING TYPE ALLEY ENTRANCE (WITH COMBINED CURB AND GUTTER)	01–01–2011	262